GATE ACCESSORIES

2024/2025

1 POSUVNÉ BRÁNY - SAMONOSNÉ

CANTILEVER GATES

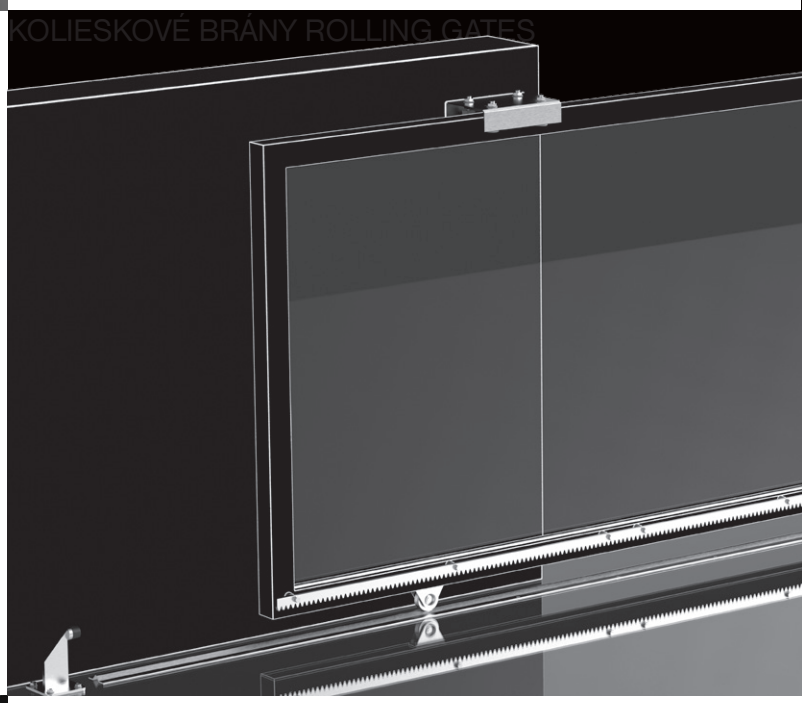

2 POSUVNÉ BRÁNY - KOLIESKOVÉ

ROLLING GATES

3 POSUVNÉ BRÁNY - PRÍSLUŠENSTVO

SLIDING GATES - ACCESORIES

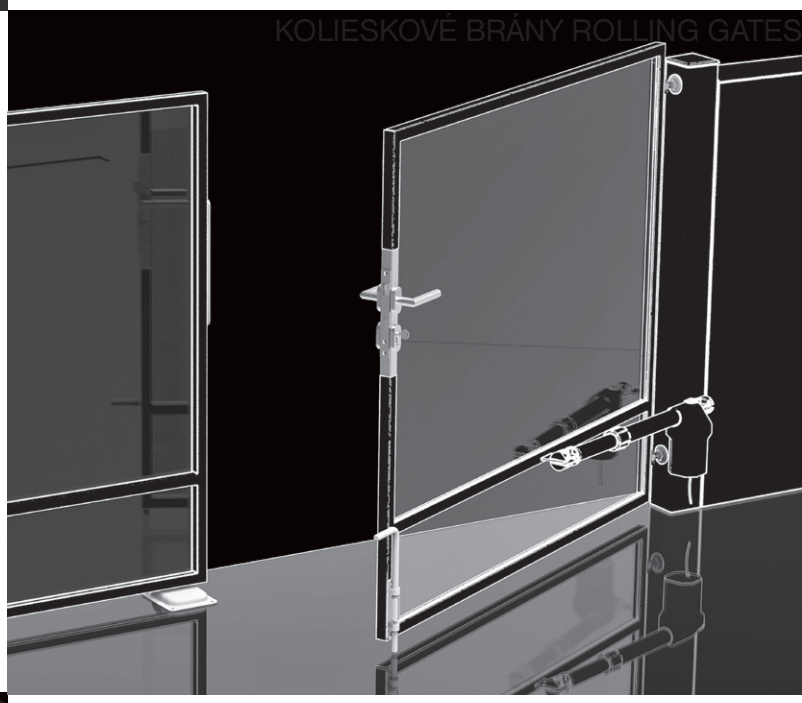

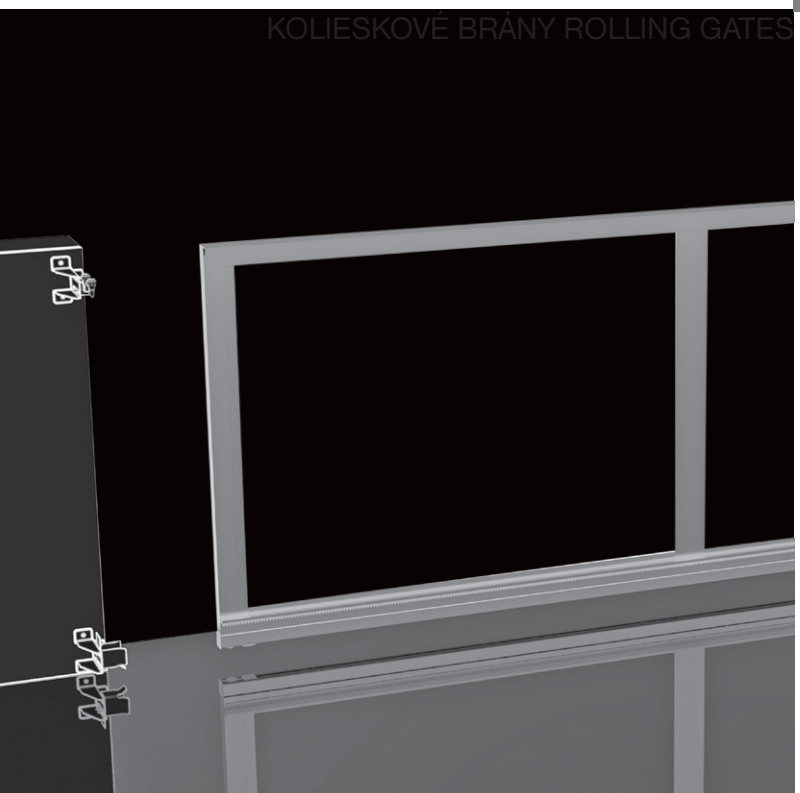

1 POSUVNÉ BRÁNY - SAMONOSNÉ
CANTILEVER GATES

SETY
SETS

SETS

PROFILY
PROFILES

VOZÍKY
CARRIAGES

PRÍSLUŠENSTVO
ACCESSORIES

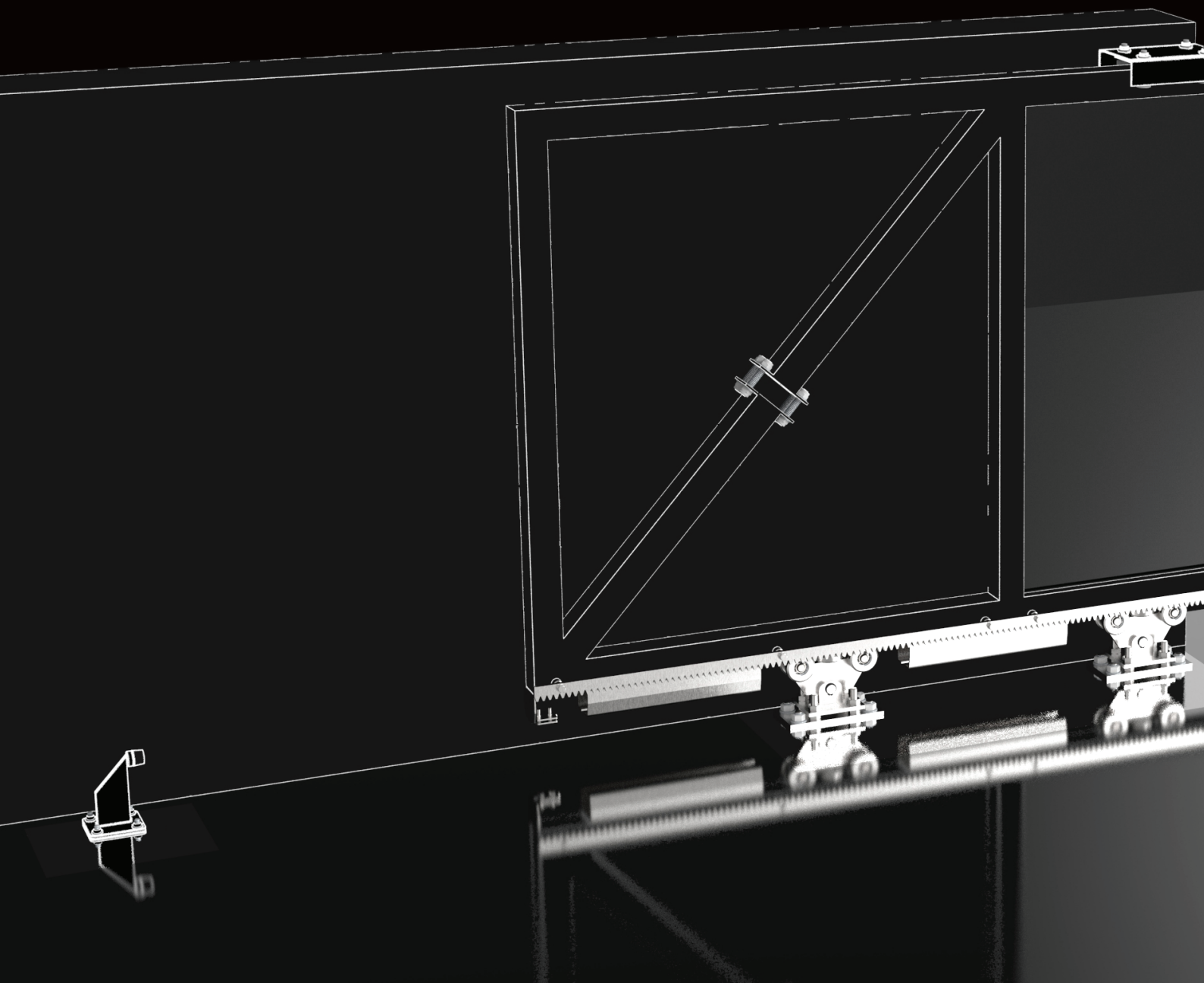

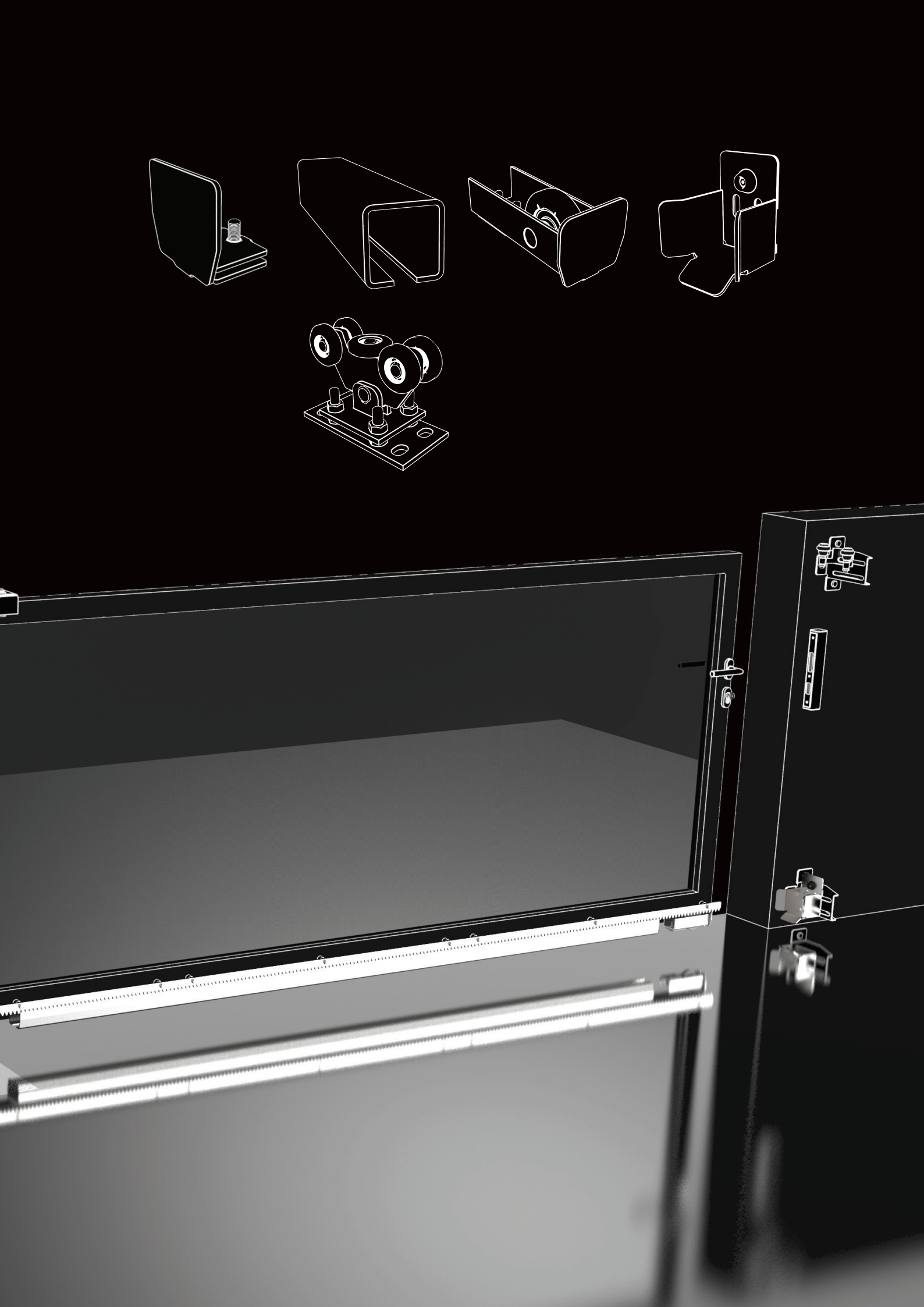

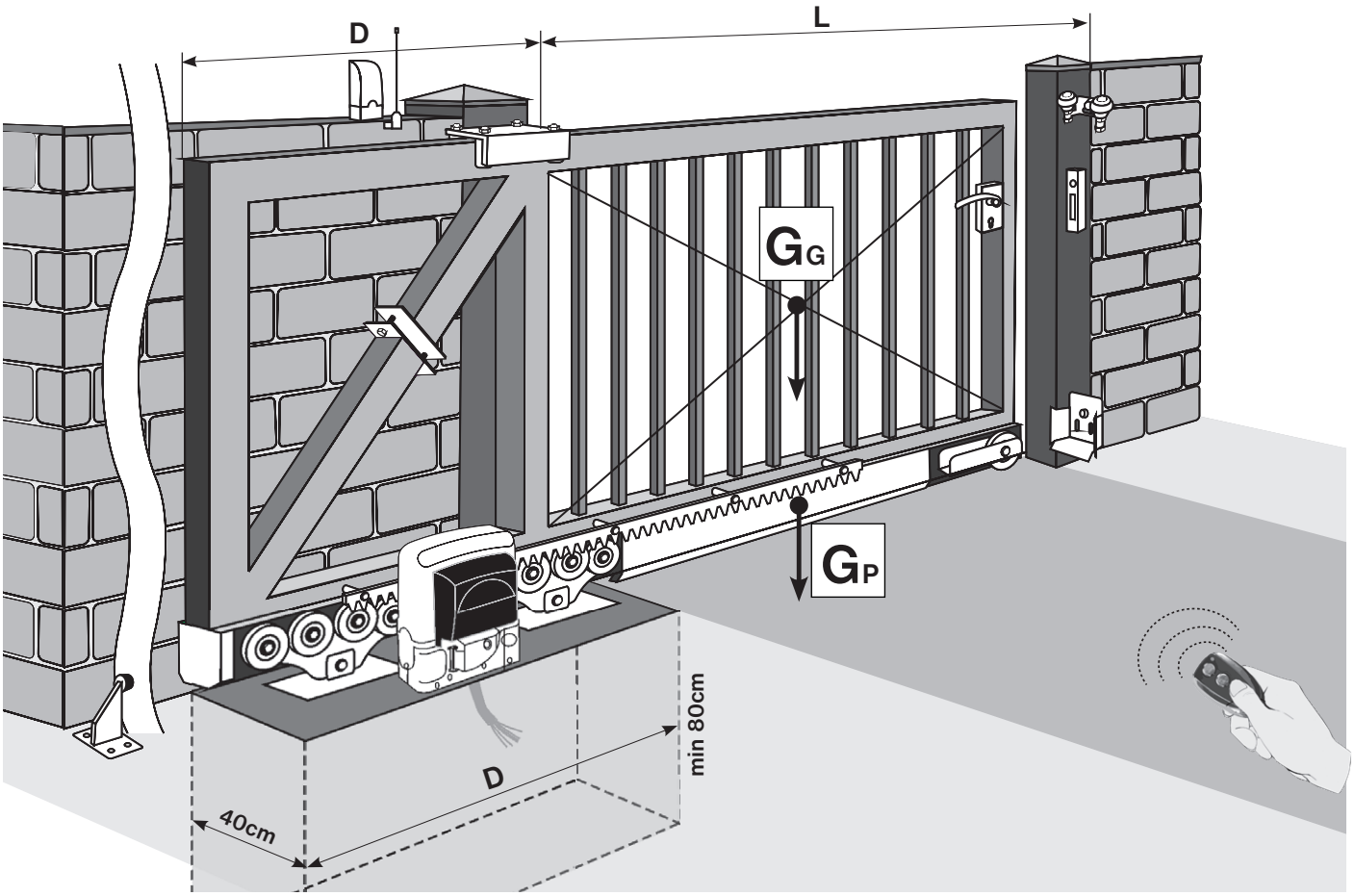

SETS		60x60					70x60		70x70						80x80								90x95	90x99	94x85				136x142			
		SV-60x60 clasic-NYLON	SV-60x60Zn clasic-NYLON	SV-60x60 inox-clasic	SV-60x60 clasic	SV-60x60Zn clasic	SV-70x60 clasic	SV-70x60Zn clasic	SV-70x70 clasic-NYLON	SV-70x70Zn clasic-NYLON	SV-70x70 clasic	SV-70x70Zn clasic	SV-70x70BP clasic	SV-70x70BP-Zn clasic	SV-80x80 clasic-NYLON	SV-80x80Zn clasic-NYLON	SV-80x80 clasic	SV-80x80BP clasic	SV-80x80BP-Zn clasic	SV-80x80 heavy	SV-80x80Zn heavy	SV-80x80 inox-clasic	SV-90x95-AL	SV-90x99-AL	SV-94x85 clasic	SV-94x85Zn clasic	SV-94x85 heavy	SV-94x85Zn heavy	SV-136x142 clasic	SV-136x142Zn clasic	SV-136x142 heavy	SV-136x142Zn heavy
L (cm)	G (kg)	D (cm)																														
300	105	119	77	83					111	84																						
300	150	156	96	109					138	102																						
350	125	147	91	101					134	97					113		87		100		83		113									
350	175	212	120	139					168	123					153		99		109		90		153									
400	140	174	107	121					156	111					134		100		110		95		134		107							
400	200	290	150	177					214	150					196		116		120		105		196		119		132					
450	160		129	148					185	131					164		114		120		103		164		119		131					
450	225		187	226					277	182					250		135		133		122		250		137		142					
500	175		151	177					213	151					194		125		122		108		194		129		134					
500	250		232	290					350	221					320		159		146		143		320		157		153		134			
550	200		187	224						180					237		138		135		125		237		139		145		140			
550	275		289	370						270					370		186		161		165		370		180		165		144			
600	210		212	256						205					281		151		189		140		281		151		155		152			
600	300		360							328					450		218		178		185		450		207		179		156		207	
650	240		270							254							181		163		161				176		166		166		197	
650	325		430							400							255		195		233				238		193		168		218	
700	250																198		175		179				192		175		175		204	
700	350																297		214		275				274		209		181		229	
750	270																227		189		215				216		187		194		213	
750	375																347		235		322				315		225		196		241	
800	400																404		257		370				361		243		212		254	
800	600																		418								362		313		312	
900	675																		555								459		393		362	
1000	750																										582		493		425	
1100	825																												617		499	
1200	900																												774		586	
1300	1000																												850		716	

Orientačné rozmery pre privátne použitie G(kg)=GG+GP (GG = hmotnosť brány bez samonosného profilu)/Approximate dimensions for private using

„dimenz“

	Goptimal (Gmax.)				
	200 (400) kg	**300** (600) kg	**400** (800) kg	**600** (1200) kg	**>600** (1800) kg
	300 (400) kg	**400** (600) kg	**550** (800) kg	**800** (1200) kg	**>800** (1800) kg
ROLLkit	 DRIFT-40-SMART	 DRIFT-80-SMART			
NICE % price	 ROAD-400 ROBUS400-BDKIT	 ROBO-600	 ROBUS600-BDKIT	 ROBUS-1000 ROX-1000	 RUN1800-ZKIT THOR-1500
CAME	 BX-PLUS-AGS-ZKIT BXV-4-ZKIT	 BX-STRONG-AGS-ZKIT BXV-8-ZKIT		 BKS-1200	 BKS-1800 BKS-2200
KEY	 TURBO50-ZKIT-R	 TURBO80-ZKIT-R			

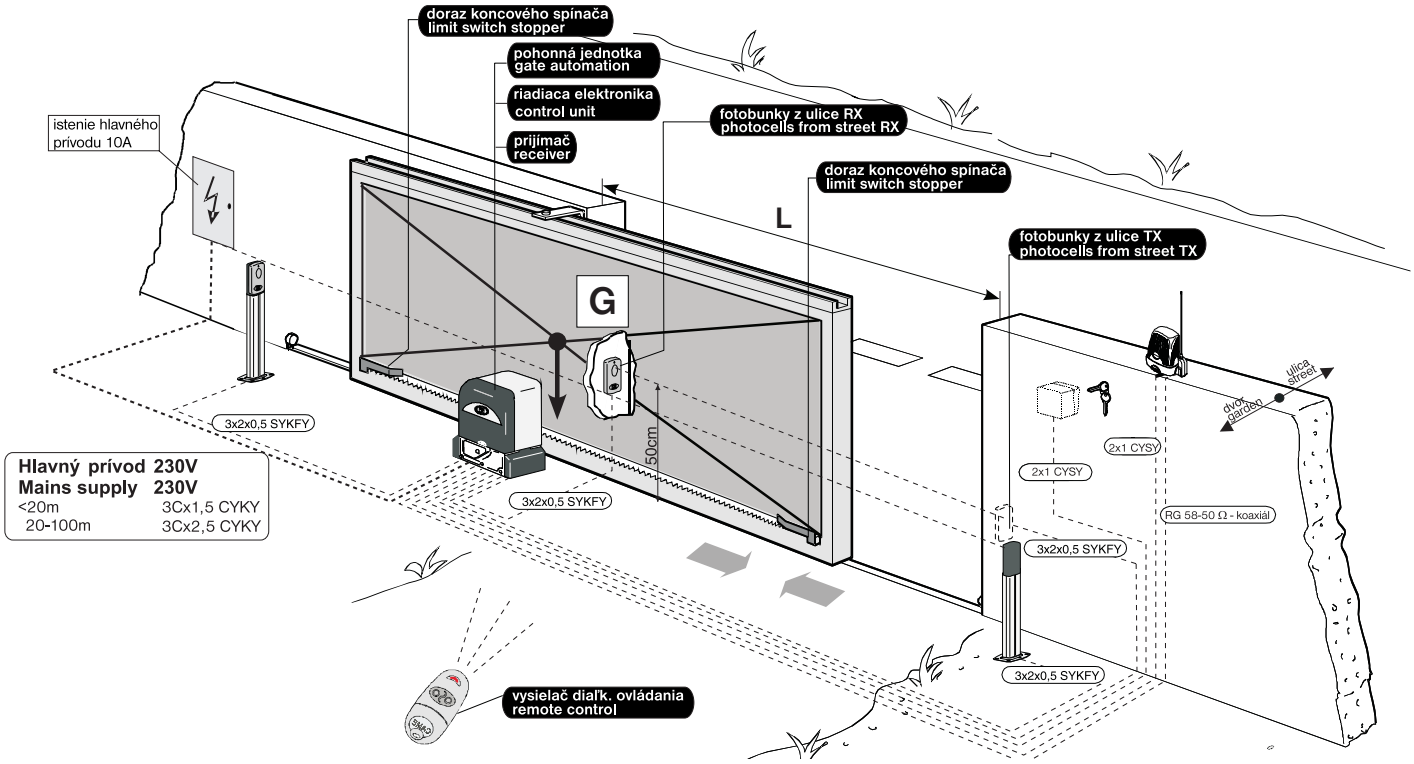

MODEL Fe/Zn 60x60 L4m/GG150kg					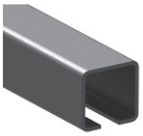	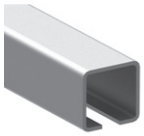
	H/34BP-4-60x60-NYLON	H/14N-60x60	H/15P-60	H/258-60x60	H/02-60x60-Fe-6000	H/02-60x60-Zn-6000
SV-60x60 ECO-NYLON	2x	1x	1x	1x	-	-
SV-60x60 clasic-NYLON	2x	1x	1x	1x	1x	-
SV-60x60Zn clasic-NYLON	2x	1x	1x	1x	-	1x

MODEL Fe/Zn 60x60 L4m/GG200kg					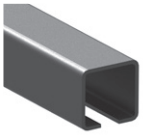	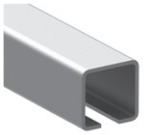
	H/34BP-4-60x60	H/14N-60x60	H/15P-60	H/258-60x60	H/02-60x60-Fe-6000	H/02-60x60-Zn-6000
SV-60x60-ECO	2x	1x	1x	1x	-	-
SV-60x60 clasic	2x	1x	1x	1x	1x	-
SV-60x60Zn clasic	2x	1x	1x	1x	-	1x

MODEL INOX 60x60 L4m/GG250kg					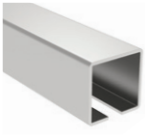
	H8/34-4-60x60	H8/14N-60x60	H8/15P-60	H8/40-60x60	H8/02-60x60-6000
SV-60x60-ECO-INOX	2x	1x	1x	1x	-
SV-60x60inox-clasic	2x	1x	1x	1x	1x

MODEL Fe/Zn 70x60 L4m/GG200kg		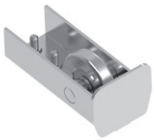			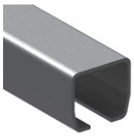	
	H/34B-4-70x60	H/14N-70x60	H/15P-70	H/40-70x60P	H/02-70x60-Fe-6000	H/02-70x60-Zn-6000
SV-70x60-ECO	2x	1x	1x	1x	-	-
SV-70x60 clasic	2x	1x	1x	1x	1x	-
SV-70x60Zn clasic	2x	1x	1x	1x	-	1x

MODEL Fe/Zn 70x70 L4m/GG175kg	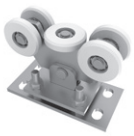				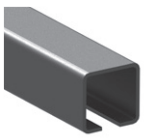	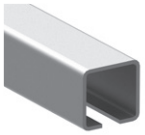
	H/34-4-70x70-NY-LON	H/14N-70x70	H/15P-70	H/258-70x70	H/02-70x70-Fe-6000	H/02-70x70-Zn-6000
SV-70x70-ECO-NYLON	2x	1x	1x	1x	-	-
SV-70x70 clasic-NYLON	2x	1x	1x	1x	1x	-
SV-70x70Zn clasic-NYLON	2x	1x	1x	1x	-	1x

MODEL Fe/Zn 70x70 L4m/GG250kg					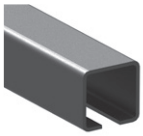	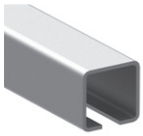	
	H/34BP-4-70x70	H/14N-70x70	H/15P-70	H/258-70x70	H/02-70x70-Fe-6000	H/02-70x70-Zn-6000	M16X30
SV-70x70BP-ECO	2x	1x	1x	1x	-	-	8x
SV-70x70BP clasic	2x	1x	1x	1x	1x	-	8x
SV-70x70BP-Zn clasic	2x	1x	1x	1x	-	1x	8x

MODEL Fe/Zn 70x70 L4m/GG250kg					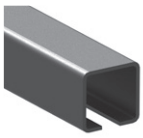	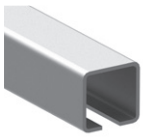
	H/34-4-70x70P	H/14N-70x70	H/15P-70	H/258-70x70	H/02-70x70-Fe-6000	H/02-70x70-Zn-6000
SV-70x70-ECO	2x	1x	1x	1x	-	-
SV-70x70 clasic	2x	1x	1x	1x	1x	-
SV-70x70Zn clasic	2x	1x	1x	1x	-	1x

MODEL Fe/Zn 80x80 L4m/GG200kg	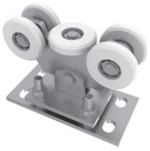				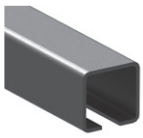	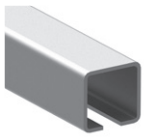
	H/34-4-80x80-NYLON	H/14N-80x80	H/15P-80	H/258-80x80	H/02-80x80-Fe-6000	H/02-80x80-Zn-6000
SV-80x80-ECO-NYLON	2x	1x	1x	1x	-	-
SV-80x80 clasic-NYLON	2x	1x	1x	1x	1x	-
SV-80x80Zn clasic-NYLON	2x	1x	1x	1x	-	1x

MODEL Fe/Zn 80x80 L4,5m/GG250kg					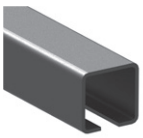	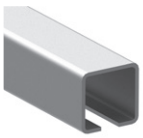	
	H/34BP-4-80x80	H/14N-80x80	H/15P-80	H/258-80x80	H/02-80x80-Fe-6000	H/02-80x80-Zn-6000	M16x30
SV-80x80BP-ECO	2x	1x	1x	1x	-	-	8x
SV-80x80BP clasic	2x	1x	1x	1x	1x	-	8x
SV-80x80BP-Zn clasic	2x	1x	1x	1x	-	1x	8x

MODEL Fe/Zn 80x80 L4,5m/GG250kg					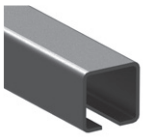	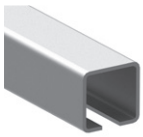
	H/34-4-80x80P	H/14N-80x80	H/15P-80	H/258-80x80	H/02-80x80-Fe-6000	H/02-80x80-Zn-6000
SV-80x80-ECO	2x	1x	1x	1x	-	-
SV-80x80 clasic	2x	1x	1x	1x	1x	-
SV-80x80Zn clasic	2x	1x	1x	1x	-	1x

top

MODEL INOX 80x80 L4,5m/GG300kg					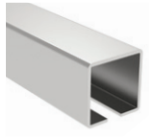
	H8/34-4-80x80	H8/14N-80x80	H8/15P-80	H8/40-80x80	H8/02-80x80-6000
SV-80x80-ECO-INOX	2x	1x	1x	1x	-
SV-80x80inox-clasic	2x	1x	1x	1x	1x

MODEL Fe/Zn 80x80 L7m/GG300kg					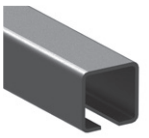		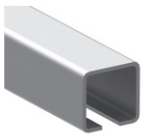	
	H/34-8-80x80 -HEAVY	H/14N-80x80	H/15P-80	H/258-80x80	H/02-80x80 -Fe-3000	H/02-80x80 -Fe-6000	H/02-80x80 -Zn-3000	H/02-80x80 -Zn-6000
SV-80x80-ECO-HEAVY	2x	1x	1x	1x	-	-	-	-
SV-80x80 heavy	2x	1x	1x	1x	1x	1x	-	-
SV-80x80Zn heavy	2x	1x	1x	1x	-	-	1x	1x

MODEL Al 90x95 L4m/GG200kg					
	H/34-4-90x95-NYLON	H/14N-90x95-NYLON	H/15P-100	H/40-90x95P	H/02-90x95-AL-6000
SV-90x95-AL-ECO	2x	1x	1x	2x	-
SV-90x95-AL	2x	1x	1x	2x	1x

new

MODEL Al 90x99 L4m/GG200kg	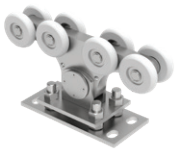	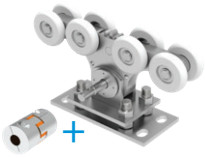				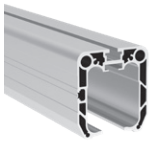
	H/34B-4-90x99-NYLON	H/34B-4G-90x99-NYLON	H8/14N-90x95	H8/15P-100	H8/40-90x99P	H/02-90x99-AL-6000
SV-90x99-AL-ECO	1x	1x	1x	1x	2x	-
SV-90x99-AL	1x	1x	1x	1x	2x	1x

new

MODEL Fe/Zn 94x85 L6m/GG300kg					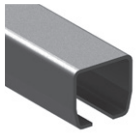		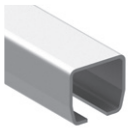	
	H/34B-4-94x85	H/14N-94x85	H/15P-100	H/40-94x85P	H/02-94x85 -Fe-3000	H/02-94x85 -Fe-6000	H/02-94x85 -Zn-3000	H/02-94x85 -Zn-6000
SV-94x85-ECO	2x	1x	1x	1x	-	-	-	-
SV-94x85 clasic	2x	1x	1x	1x	1x	1x	-	-
SV-94x85Zn clasic	2x	1x	1x	1x	-	-	1x	1x

MODEL Fe/Zn 94x85 L8m/GG500kg					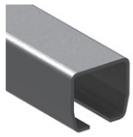	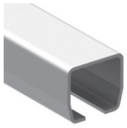
	H/34B-8-94x85-HEAVY	H/14N-94x85	H/15P-100	H/40-94x85P	H/02-94x85-Fe-6000	H/02-94x85-Zn-6000
SV-94x85-ECO-HEAVY	2x	1x	1x	1x	-	-
SV-94x85 heavy	2x	1x	1x	1x	2x	-
SV-94x85Zn heavy	2x	1x	1x	1x	-	2x

MODEL Fe/Zn 136x142 L9m/GG600kg					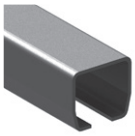	
	H/34B-4-136x142	H/14N-136x142	H/15P-145	H/40-136x142P	H/02-136x142-Fe-6000	H/02-136x142-Zn-6000
SV-136x142-ECO	2x	1x	1x	1x	-	-
SV-136x142 clasic	2x	1x	1x	1x	2x	-
SV-136x142Zn clasic	2x	1x	1x	1x	-	2x

MODEL Fe/Zn 136x142 L11m/GG800kg		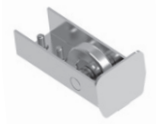			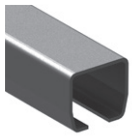		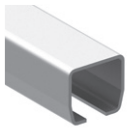	
	H/34B-8-136x142 -HEAVY	H/14N-136x142	H/15P-145	H/40-136x142P	H/02-136x142 -Fe-3000	H/02-136x142 -Fe-6000	H/02-136x142 -Zn-3000	H/02-136x142 -Zn-6000
SV-136x142-ECO-HEAVY	2x	1x	1x	1x	-	-	-	-
SV-136x142 heavy	2x	1x	1x	1x	1x	2x	-	-
SV-136x142Zn heavy	2x	1x	1x	1x	-	-	1x	2x

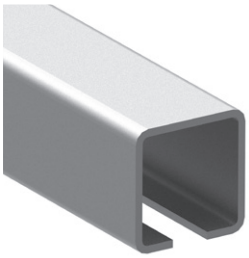

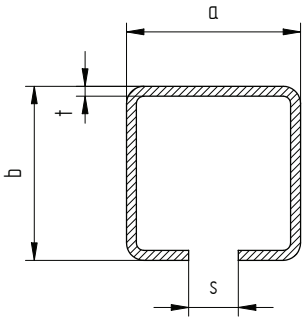

Quality	Finish	art.	a	b	t	s	L	
Fe	raw	H/02-60x60-Fe-3000	60	60	4	15	3000	
		H/02-60x60-Fe-6000					6000	
	Zn	H/02-60x60-Zn-3000					3000	
		H/02-60x60-Zn-6000					6000	
		H/02-60x60-Zn-7000					7000	new
	raw	H/02-70x70-Fe-3000	70	70	4	20	3000	
		H/02-70x70-Fe-6000					6000	
	Zn	H/02-70x70-Zn-3000					3000	
		H/02-70x70-Zn-6000					6000	
		H/02-70x70-Zn-7000					7000	new
	raw	H/02-80x80-Fe-3000	80	80	5	25	3000	
		H/02-80x80-Fe-6000					6000	top
	Zn	H/02-80x80-Zn-3000	78	78	4	20	3000	
		H/02-80x80-Zn-6000					6000	top
		H/02-80x80-Zn-7000					7000	
AISI304	raw	H8/02-60x60-3000	58	58	3	15	3000	
		H8/02-60x60-6000					6000	
		H8/02-80x80-3000	76	76		20	3000	
		H8/02-80x80-6000					6000	

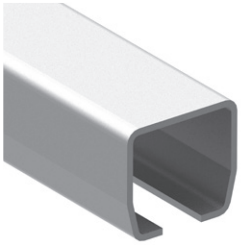

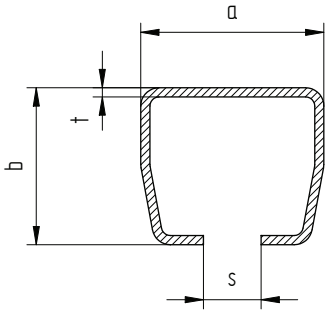

Quality	Finish	art.	a	b	t	s	L
Fe	raw	H/02-70x60-Fe-3000	70	60	3,5	22	3000
		H/02-70x60-Fe-6000					6000
	Zn	H/02-70x60-Zn-3000					3000
		H/02-70x60-Zn-6000					6000
	raw	H/02-94x85-Fe-3000	94	85	5	33	3000
		H/02-94x85-Fe-6000					6000
	Zn	H/02-94x85-Zn-3000					3000
		H/02-94x85-Zn-6000					6000
	raw	H/02-136x142-Fe-3000	136	142	6	38	3000
		H/02-136x142-Fe-6000					6000
	Zn	H/02-136x142-Zn-3000					3000
		H/02-136x142-Zn-6000					6000

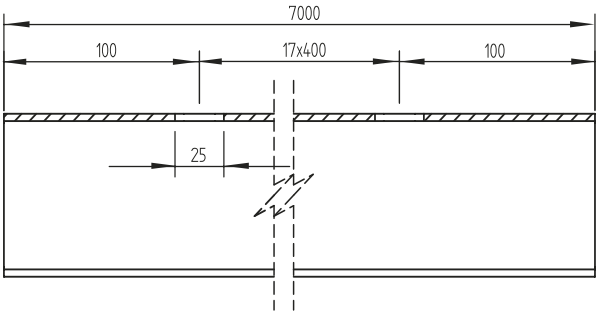

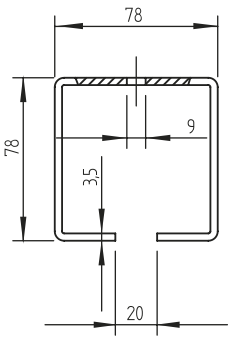

Quality	Finish	art.
Fe	Zn	H/02-80x80-Zn-D-7000

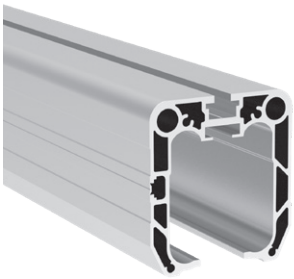

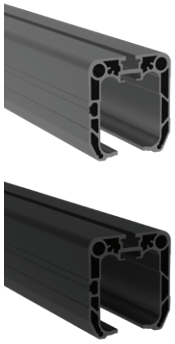

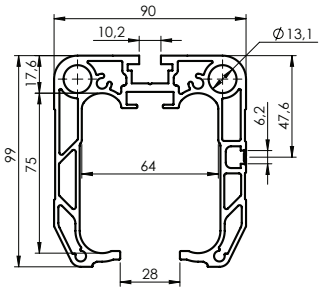

Quality	Finish	art.	Color	L	
ALUMINIUM	natural	H/02-90x99-AL-6000	-		new
		H/02-90x99-AL-6000-R9005	RAL 9005	6000	new
		H/02-90x99-AL-6000-R7016	RAL 7016		new
		H/02-90x99-AL-7000	-		new
		H/02-90x99-AL-7000-R9005	RAL 9005	7000	new
		H/02-90x99-AL-7000-R7016	RAL 7016		new

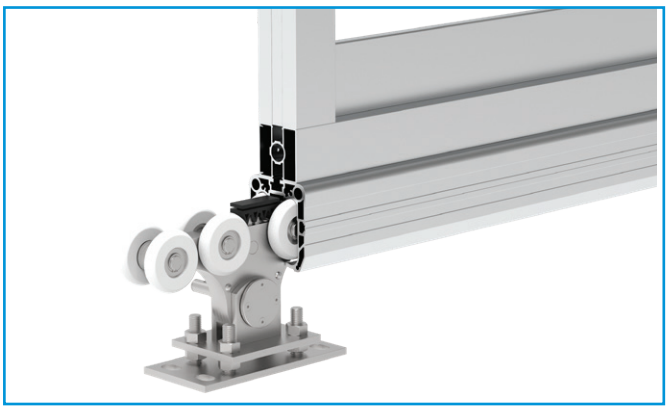

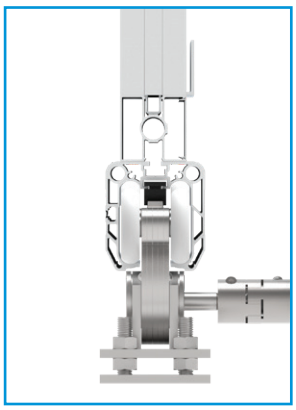

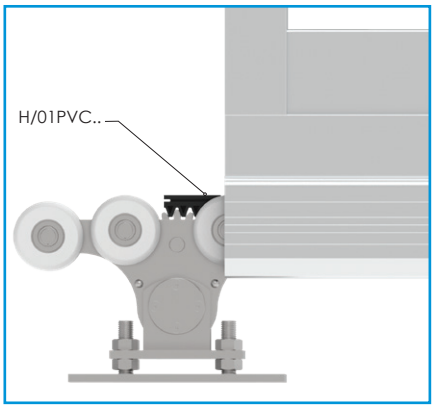

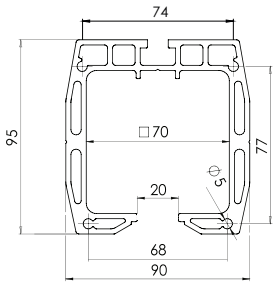

Quality	Finish	art.	Color	L	
ALUMINIUM	natural	H/02-90x95-AL-6000	-		new
		H/02-90x95-AL-6000-R9005	RAL 9005	6000	new
		H/02-90x95-AL-6000-R7016	RAL 7016		new

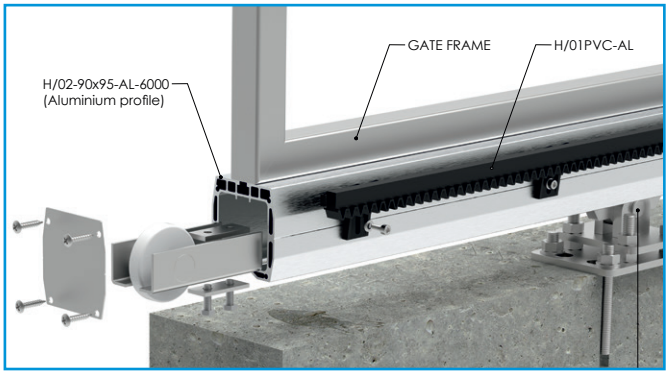

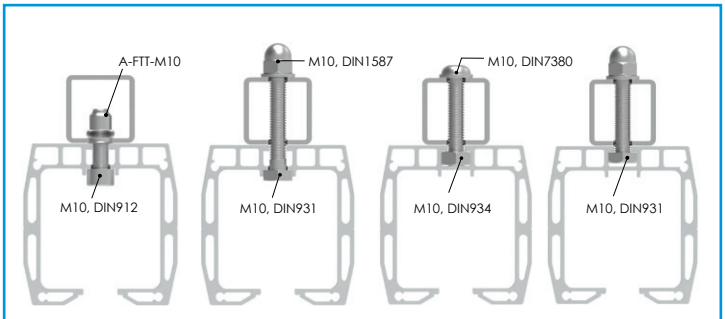

VARIOUS OPTIONS FOR MOUNTING FRAME to ALUMINIUM PROFILE **H/02-90x95-AL-6000**

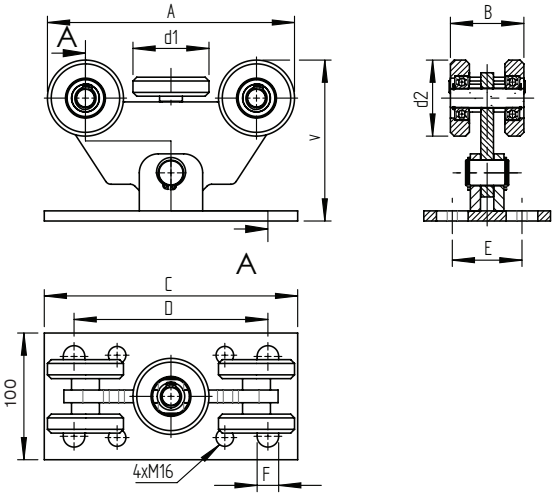

Quality	Finish	art.	v	d1	d2	A	B	C	D	E	F	H/34-COVER
Fe	Zn	H/34BP-4-60x60	128	50	50	165	44	145	115	60	13	✓ optional
		H/34BP-4-60x60-NYLON										
AISI304	raw	H8/34BP-4-60x60										
Fe	Zn	H/34BP-4-70x70	130	60	60	195	58	200	152	55	17	-
		H/34BP-4-80x80	132	68	68	203	61	200	152	56	18	

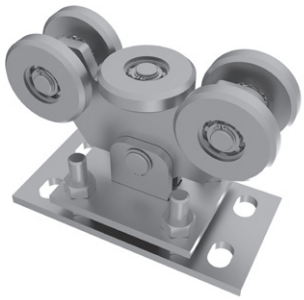

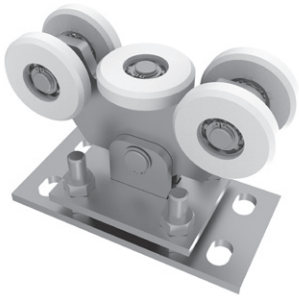

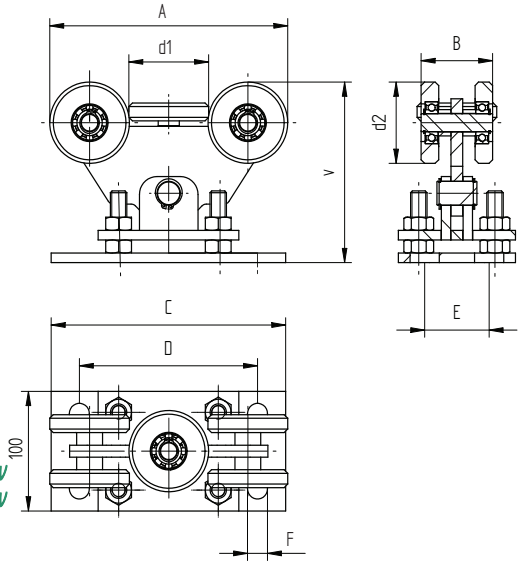

Quality	Finish	art.	v	v max	d1	d2	A	B	C	D	E	F	H/34-COVER
Fe	Zn	H/34-4-60x60P	146	166	51	50	165	44	115	145	60	13	✓ optional
AISI304	raw	H8/34-4-60x60											
Fe	Zn	H/34-4-70x70P	150	170	60	60	195	58	200	152	55	17	-
		H/34-4-70x70-NYLON											
		H/34-4-80x80P			68	68	203	61					
		H/34-4-80x80-NYLON											
AISI304	raw	H8/34-4-80x80											
Fe	Zn	H/34-4-90x95-NYLON			69,5	69,5	206	62					

new
new
new

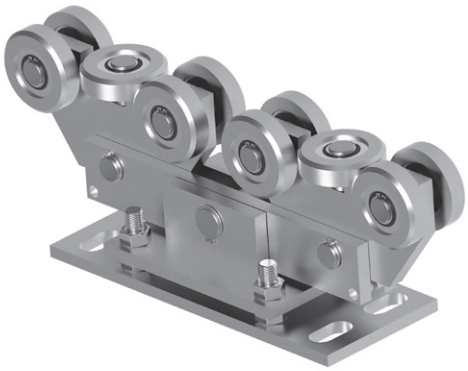

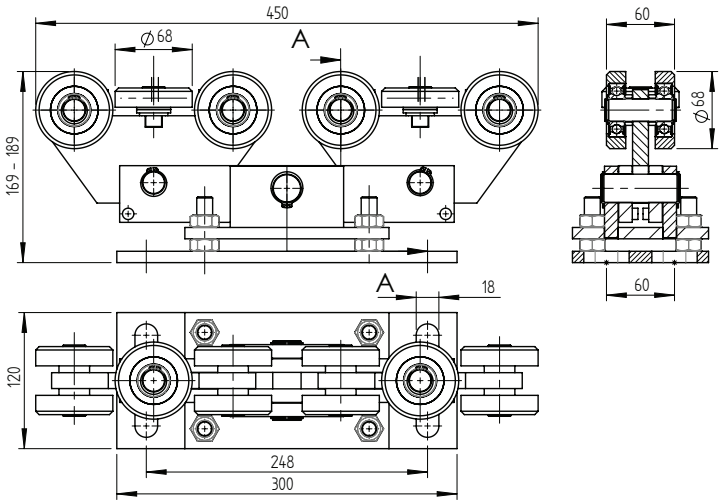

Quality	Finish	art.
Fe	Zn	H/34-8-80x80-HEAVY

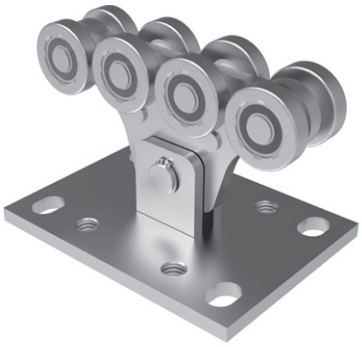

Quality	Finish	art.
Fe	Zn	H/34B-4-70x60

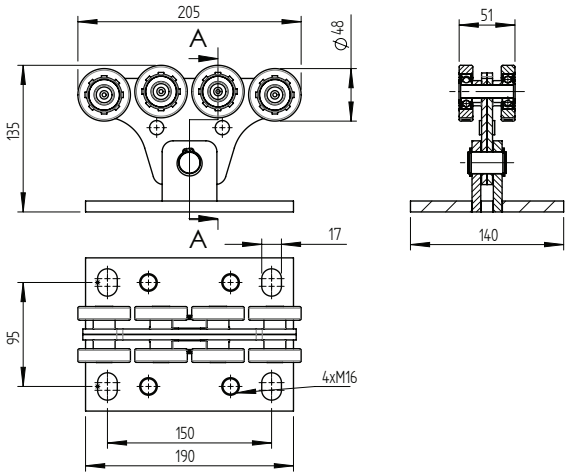

Quality	Finish	art.
Fe	Zn	H/34-4-70x60

new

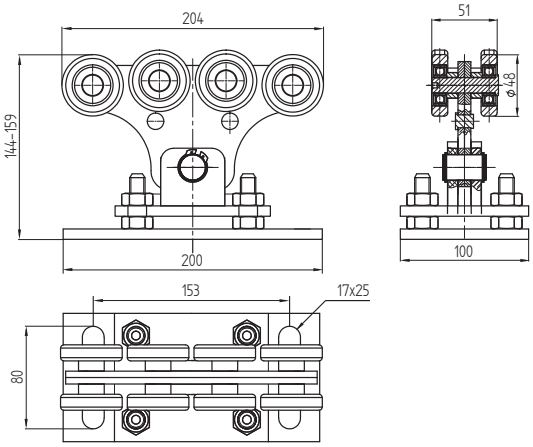

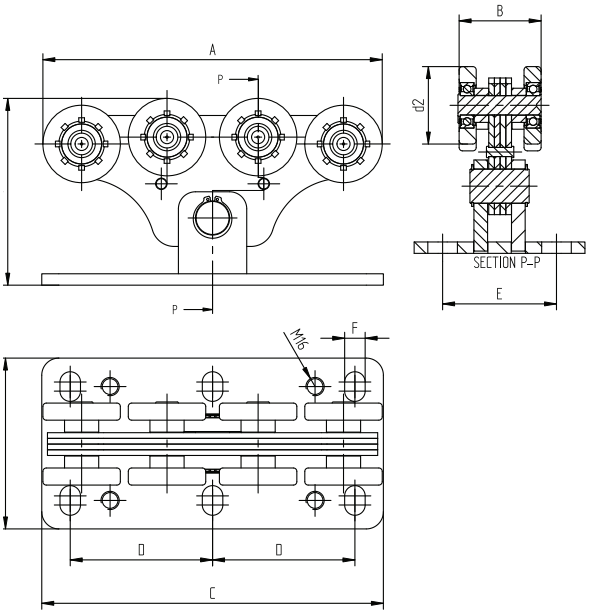

Quality	Finish	art.	v	d2	A	B	C	D	E	F	G
Fe	Zn	H/34B-4-94x85	164	68	298	72	300	125	104	18	150
		H/34B-4-136x142	263	113	470	103	470	210	150	17	200

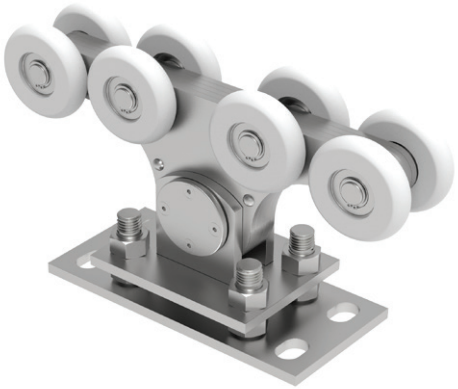

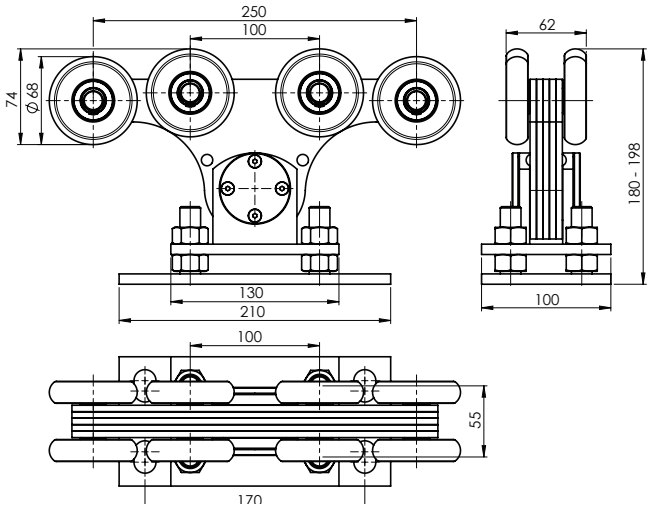

Quality	Finish	art.
Fe	Zn	H/34B-4-90x99-NYLON

new

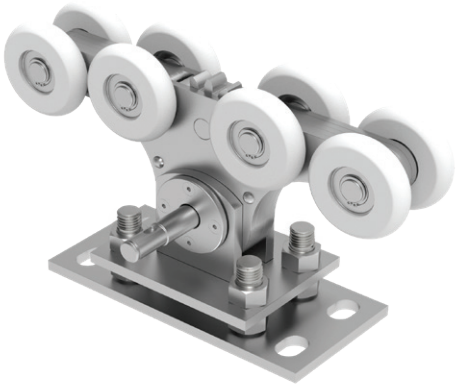

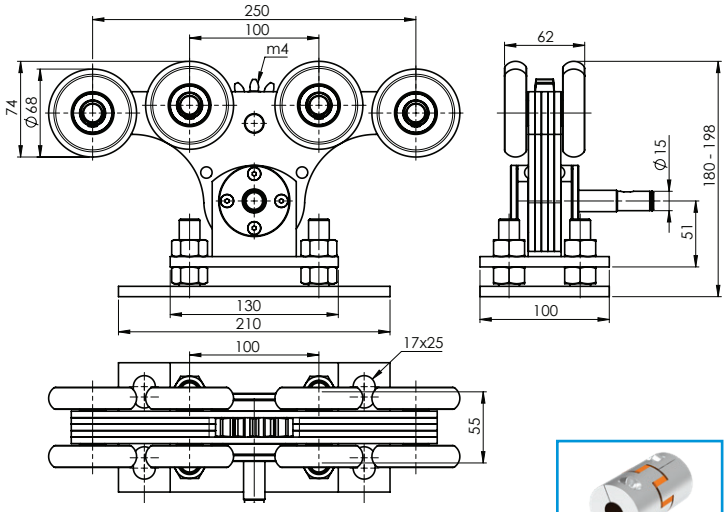

Quality	Finish	art.
Fe	Zn	H/34B-4G-90x99-NYLON

new

H/66-15x25

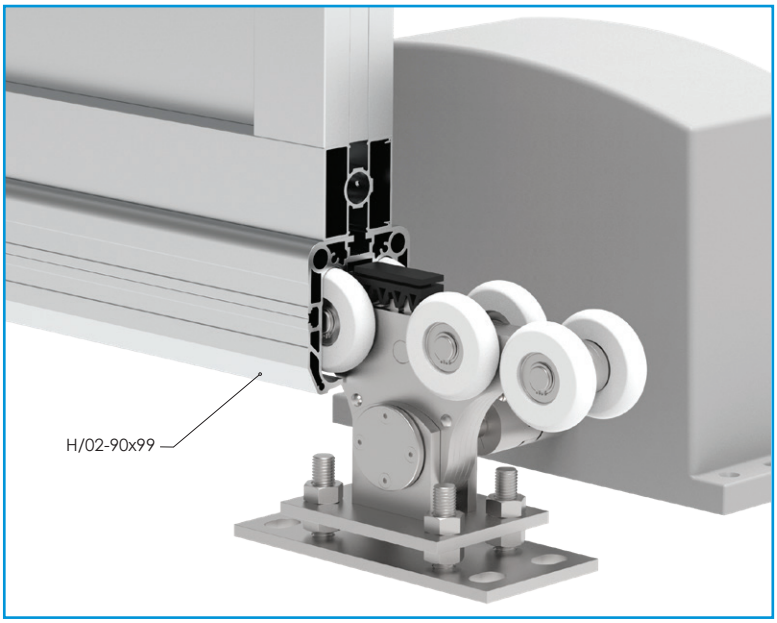

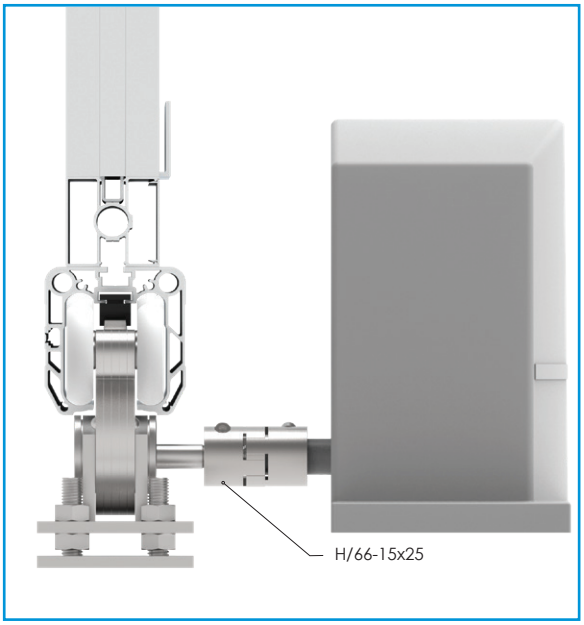

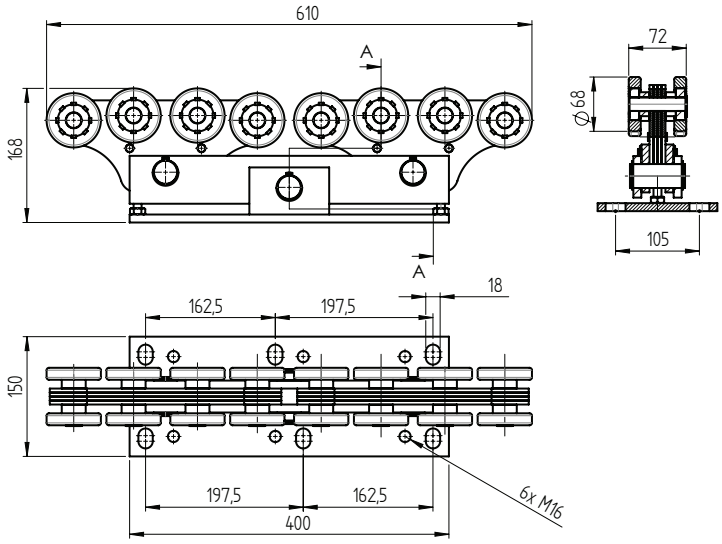

Quality	Finish	art.
Fe	Zn	H/34B-8-94x85-HEAVY

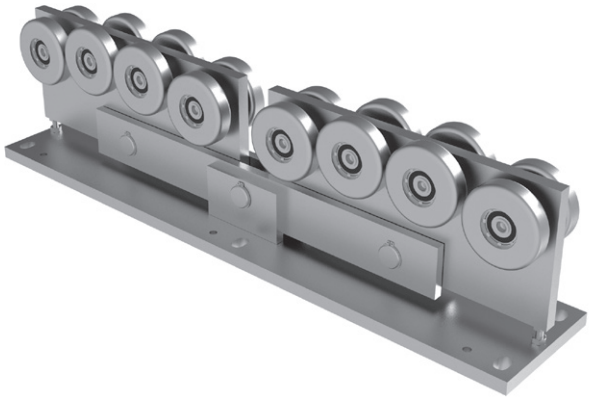

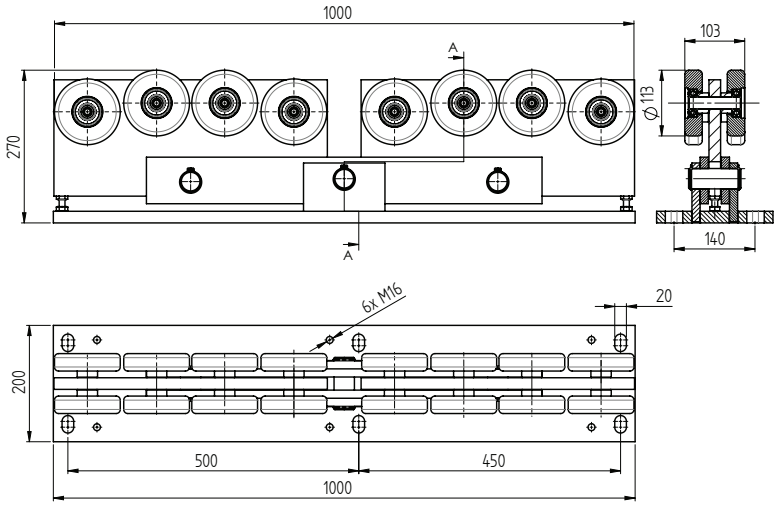

Quality	Finish	art.
Fe	Zn	H/34B-8-136x142-HEAVY

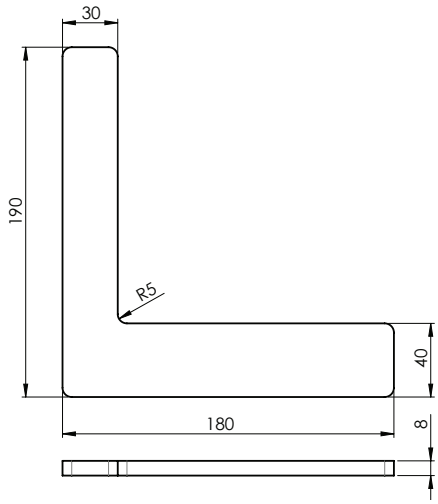

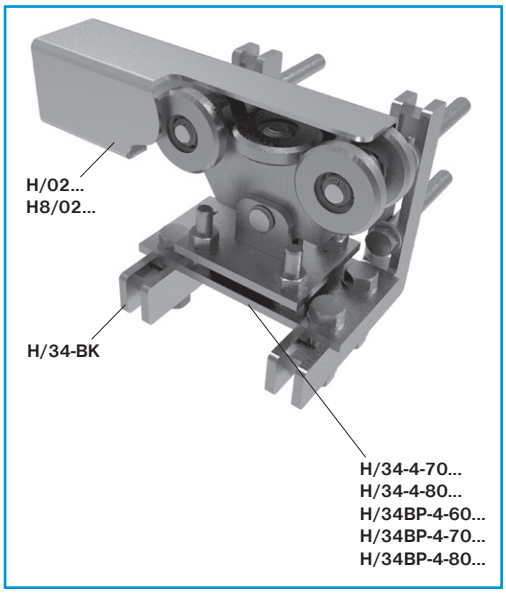

Quality	Finish	art.
Fe	raw	H/34-BK

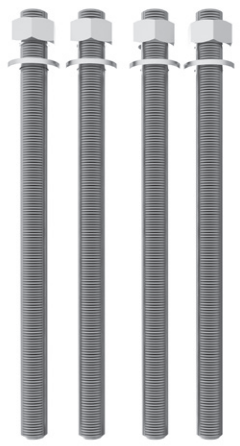

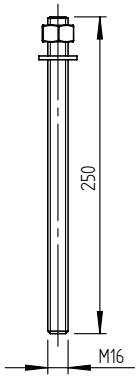

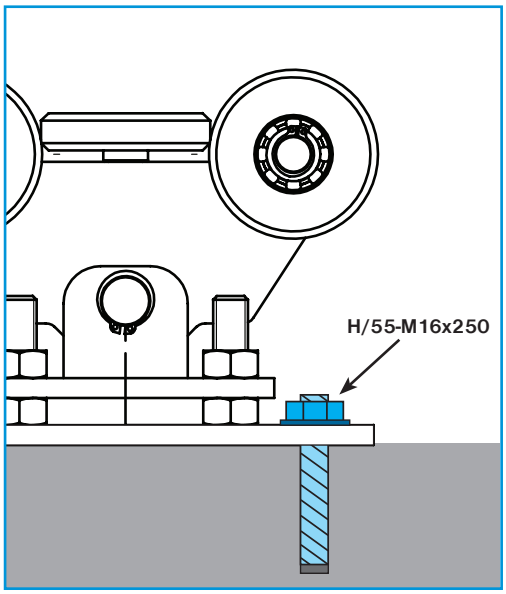

Quality	Finish	art.
Fe	Zn	H/55-M16x250

Quality	Finish	art.	carriages compatibility
PVC	raw	H/34-COVER	...60x60 ...60x60P ...60x60-NYLON

new

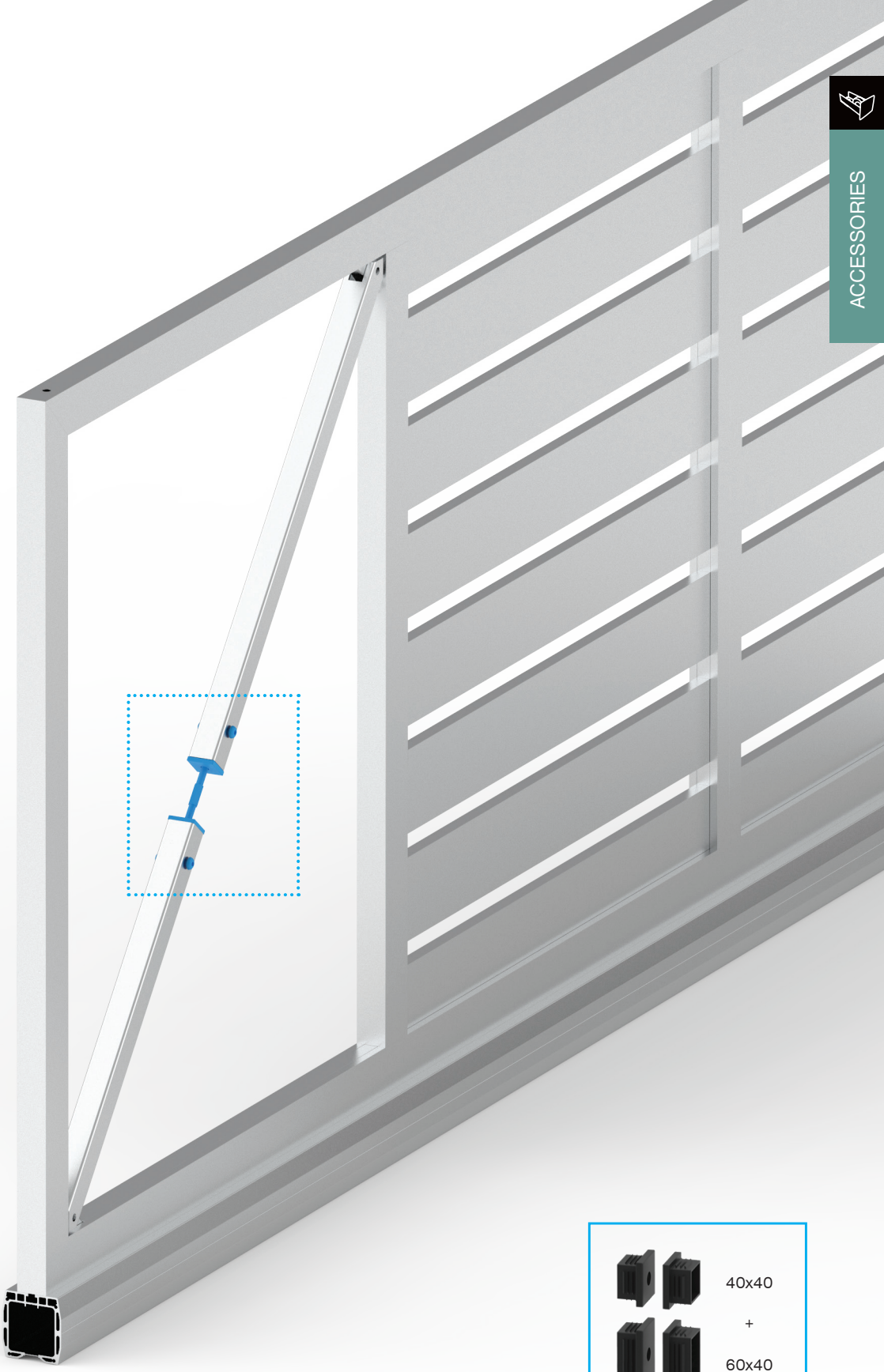

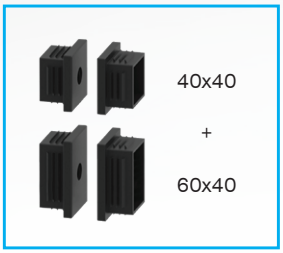

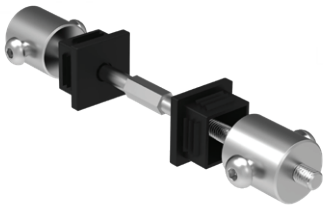

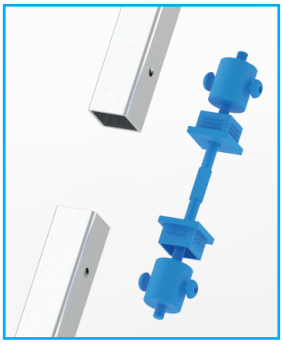

Quality	Finish	art.
Fe	Zn	H/65-40x40

new

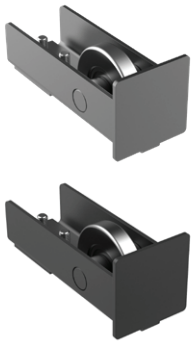

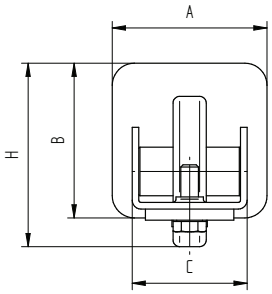

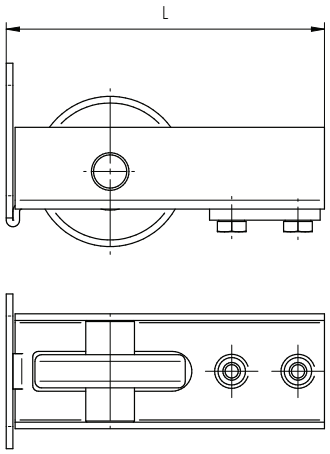

Quality	Finish	art.	Color	A	B	C	H	L	
Fe	Zn	H/14N-60x60	-	60	60	51	72	143	
		H/14N-60x60-R9005	RAL 9005						new
		H/14N-60x60-R7016	RAL 7016						new
AISI304	raw	H8/14N-60x60	-						
Fe	Zn	H/14N-70x70	-	70	70	52	83	144	
		H/14N-70x70-R9005	RAL 9005						new
		H/14N-70x70-R7016	RAL 7016						new
		H/14N-80x80	-	80	80	61	92	149	
		H/14N-80x80-R9005	RAL 9005						new
		H/14N-80x80-R7016	RAL 7016						new
AISI304	raw	H8/14N-80x80	-	76	76				

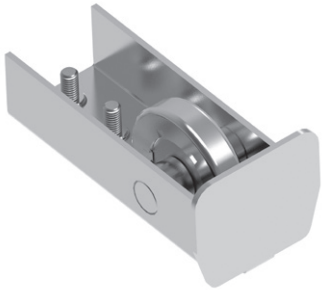

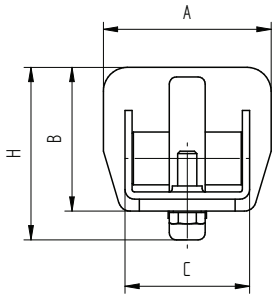

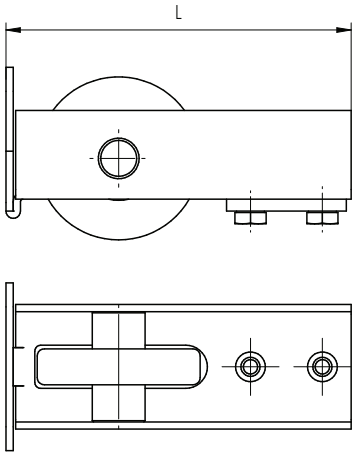

Quality	Finish	art.	A	B	C	H	L
Fe	Zn	H/14N-70x60	70	60	52	72	144
		H/14N-94x85	94	85	66	96	143
		H/14N-136x142	138	142	103	161	198

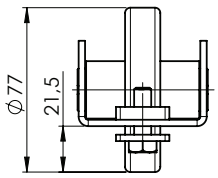

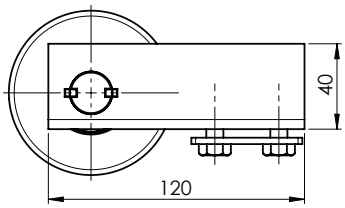

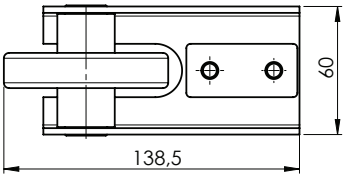

Quality	Finish	art.	
Fe	Zn	H/14N-90x95-NYLON	new
AISI304	raw	H8/14N-90x99-NYLON	new

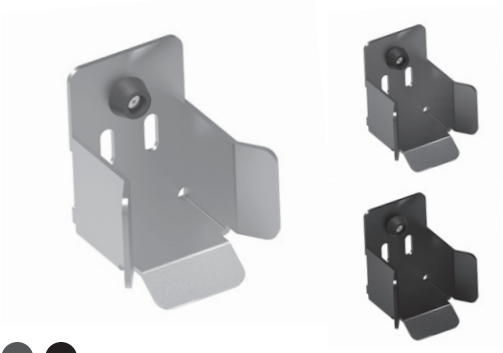

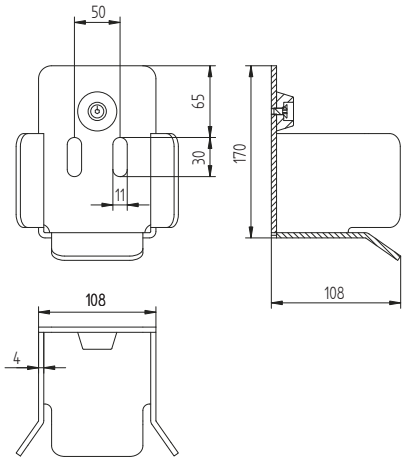

Quality	Finish	art.	Color	A	B	h	s	H	
Fe	Zn	H/15P-60	-	130	74	56	31	102	
		H/15P-60-R9005	RAL 9005						new
		H/15P-60-R7016	RAL 7016						new
AISI304	raw	H8/15P-60	-						
Fe	Zn	H/15P-70	-		90	55	35	100	
		H/15P-70-R9005	RAL 9005						new
		H/15P-70-R7016	RAL 7016						new
		H/15P-80	-	135	98	55	35	95	
		H/15P-80-R9005	RAL 9005						new
		H/15P-80-R7016	RAL 7016						new
AISI304	raw	H8/15P-80	-						
Fe	Zn	H/15P-100	-	170	108	65	50	108	
		H/15P-100-R9005	RAL 9005						new
		H/15P-100-R7016	RAL 7016						new
AISI304	raw	H8/15P-100	-						new
Fe	Zn	H/15P-145	-	225	150	75	80	105	

H/16-46x130
H8/16-46x130

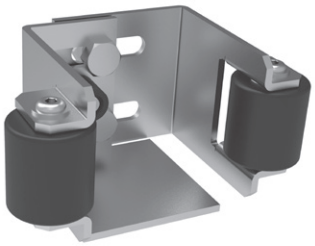

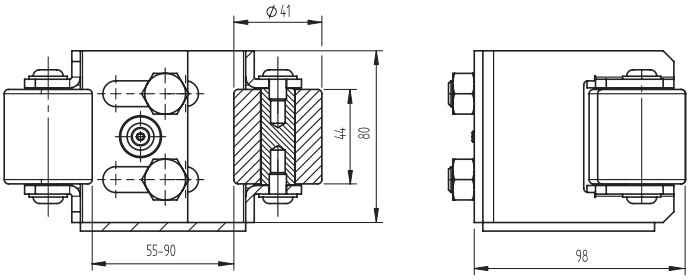

Quality	Finish	art.
Fe	Zn	H/15P-55-90

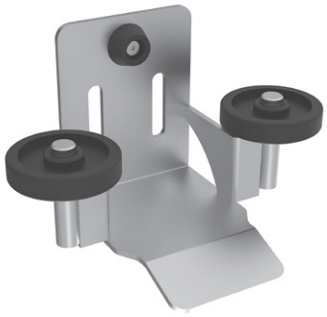

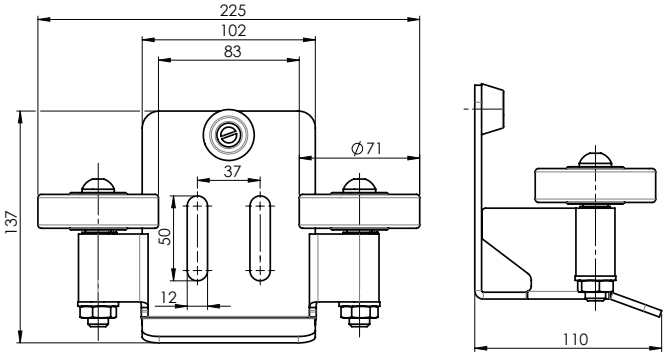

H/16-46x130
H8/16-46x130

Quality	Finish	art.
Fe	Zn	H/15P-80-NYLON

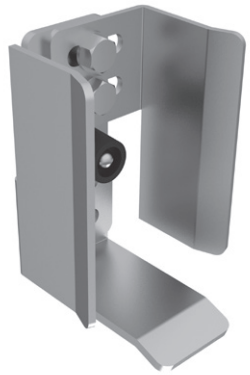

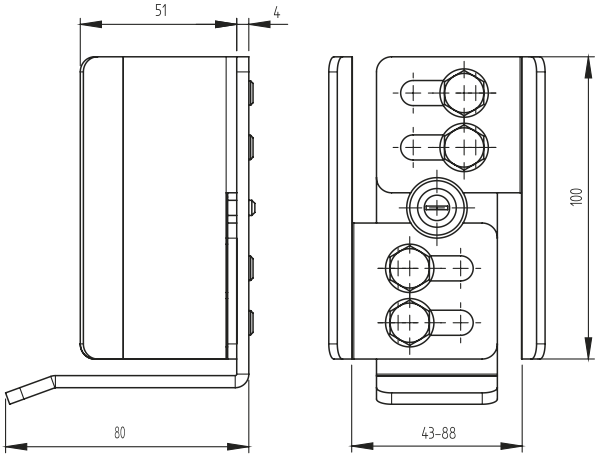

Quality	Finish	art.
Fe	Zn	H/11

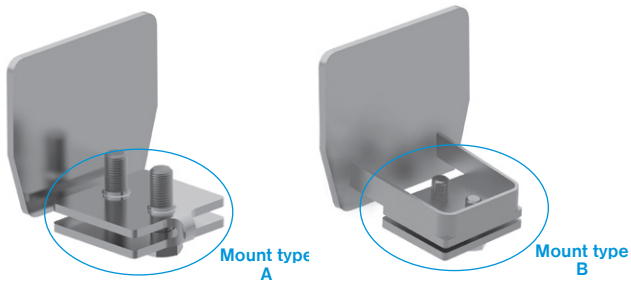

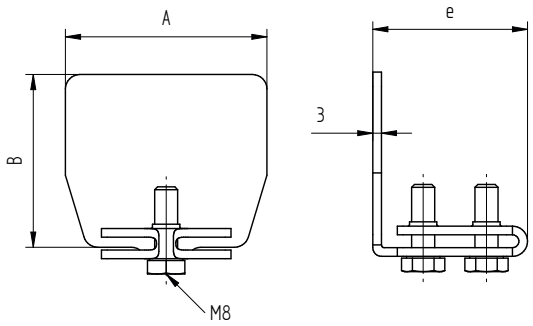

Quality	Finish	art.	A	B	e	Mount type
Fe	Zn	H/40-70x60P	70	60	53	A
		H/40-94x85P	94	85		
		H/40-136x142P	136	142	92	B

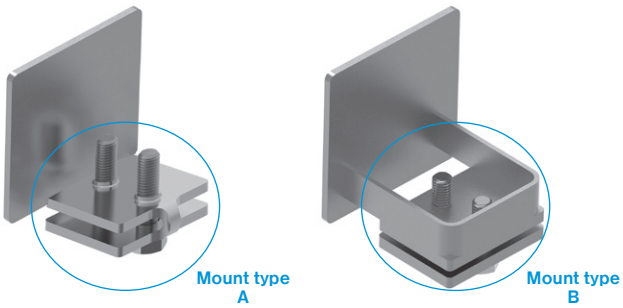

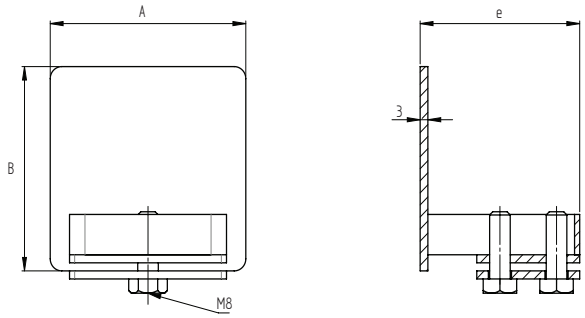

Quality	Finish	art.	A	B	e	Mount type
AISI304	raw	H8/40-60x60	60	60	53	A
Fe	Zn	H/40-70x70P	70	70		
		H/40-80x80P	80	80		
AISI304	raw	H8/40-80x80	76	76	62	B

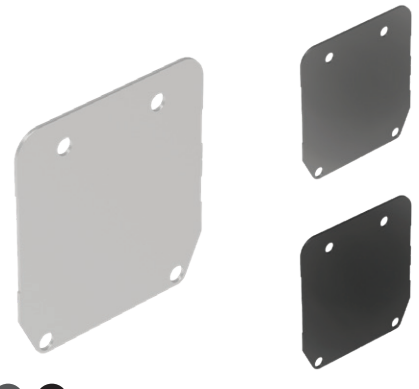

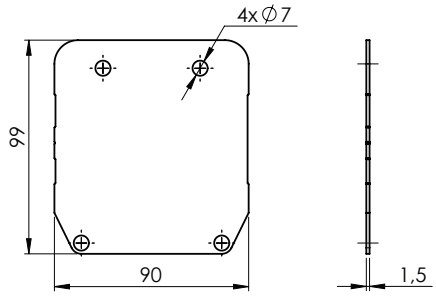

Quality	Finish	art.	Color	
AISI304	raw	H8/40-90x99P	-	new
		H8/40-90x99P-R9005	black	new
		H8/40-90x99P-R7016	anthracite	new

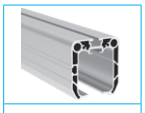

H/02-90x99-AL...

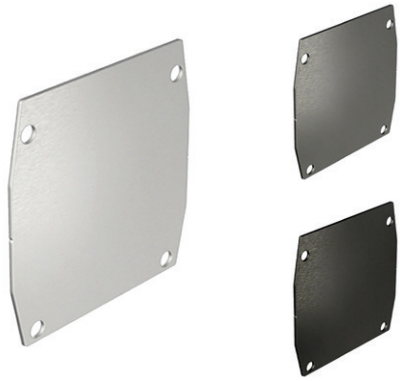

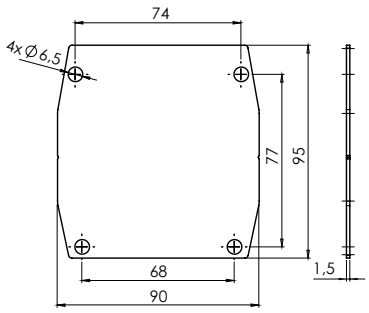

Quality	Finish	art.	Color	
Fe	Zn	H/40-90x95P	-	new
		H/40-90x95P-R9005	RAL 9005	new
		H/40-90x95P-R7016	RAL 7016	new

H/02-90x95-AL...

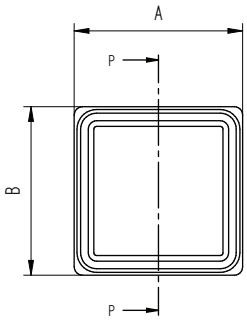

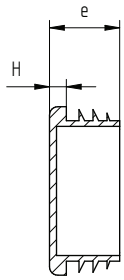

Quality	Finish	art.	A	B	H
PVC	Black	E2/258-40x40	40	40	4,8
		E2/258-50x50	50	50	2
		H/258-60x60	60	60	6
		H/258-70x70	70	70	
		H/258-80x80	80	80	

2 POSUVNÉ BRÁNY - KOLIESKOVÉ
ROLLING GATES

KOLIESKA
WHEELS

SPODNÉ VODIACE PROFILY
TRACKS

OBLÚKOVÁ KOLIESKOVÁ BRÁNA
CURVED ROLLING GATE

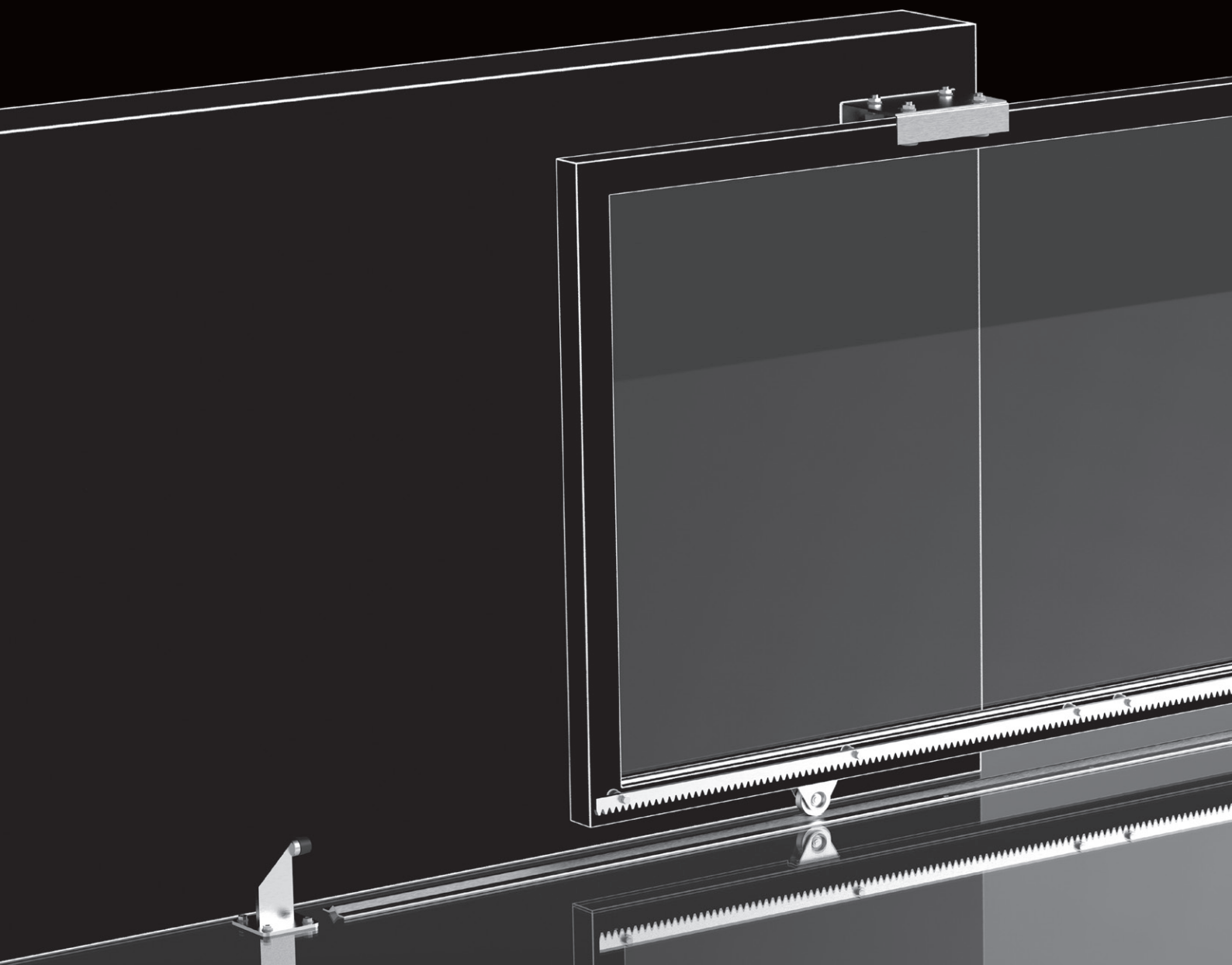

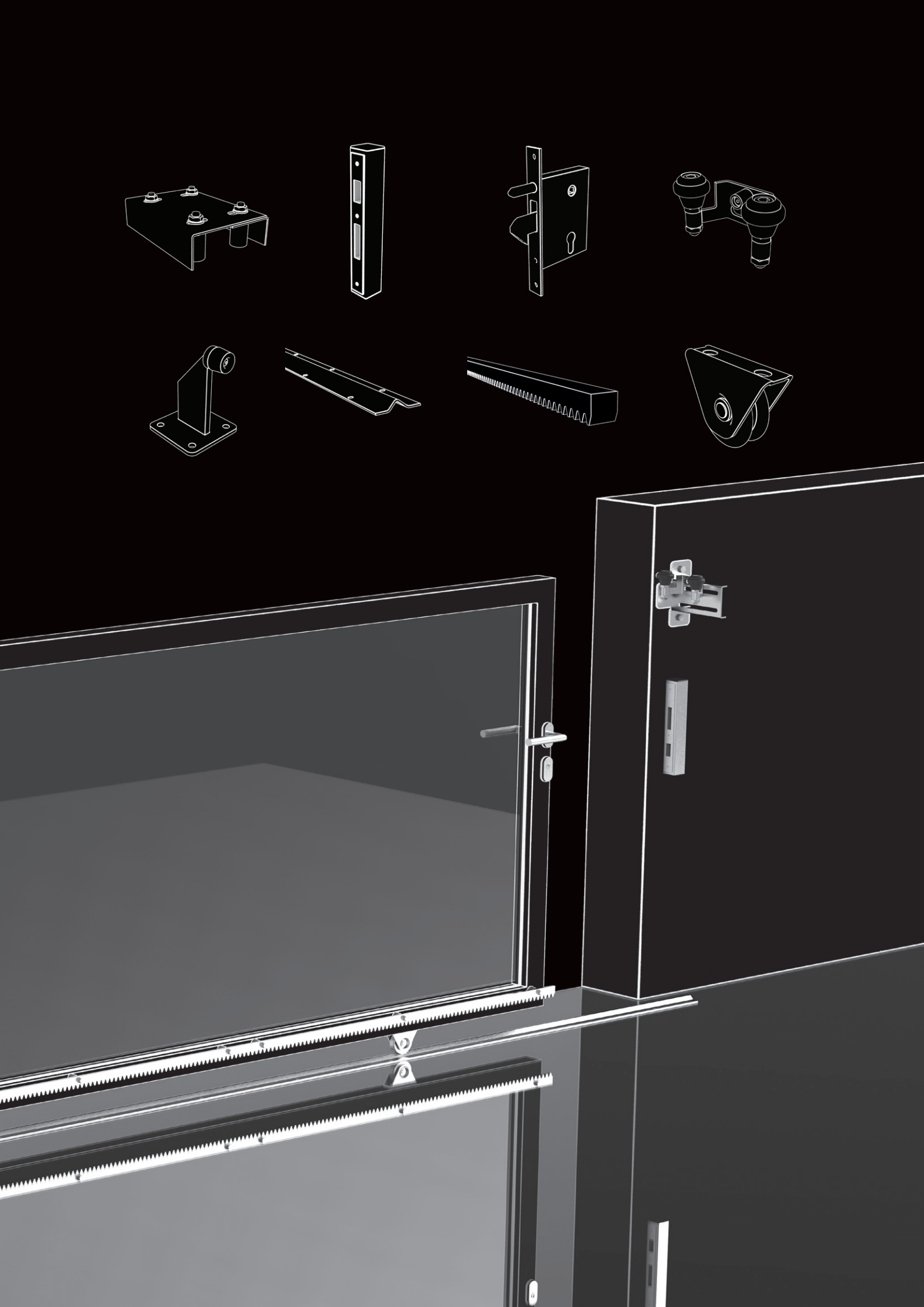

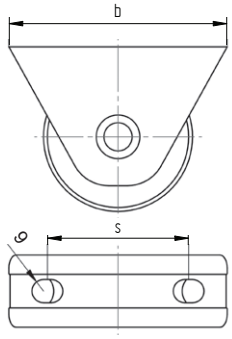

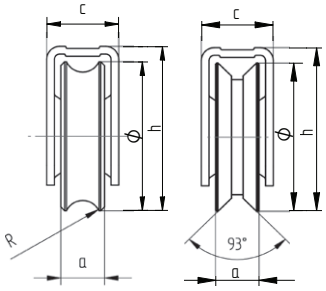

Quality	Finish	art.	Color	Ø	H	h	R	a	b	c	s	Gmax/2pcs (kg)				
Fe	Zn	H/31U-60	-	58	75	64	8	17	85	27	55	200	✓	-	-	top
		H/31U-60-R9005	RAL 9005													new
		H/31U-60-R7016	RAL 7016													new
		H/31U-80C	-	78	95	85		20	100	35	70	300				
		H/31U-80C-R9005	RAL 9005													new
		H/31U-80C-R7016	RAL 7016													new
AISI304	raw	H8/31U-80-R10	-				10	23								
		H8/31U-80-R10-NYLON						25								new
Fe	Zn	H/31U-100		98	115	105	8	22	132		102	400				
		H/31V-60		58	75	64	-	17	85	27	55	200	-	✓	-	top
AISI304	raw	H8/31V-60-NYLON								28						new
Fe	Zn	H/31V-60-R9005	RAL 9005							27						new
		H/31V-60-R7016	RAL 7016													new
		H/31V-80C	-	78	95	85		20	100	35	70	300				top
		H/31V-80C-R9005	RAL 9005													new
		H/31V-80C-R7016	RAL 7016													new
AISI304	raw	H8/31V-80	-													
		H8/31V-80-NYLON														new
Fe	Zn	H/31V-100		98	115	106		22	132		102	350				

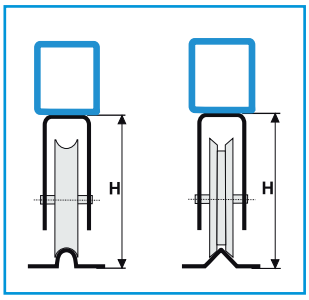

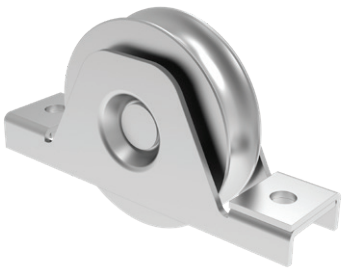

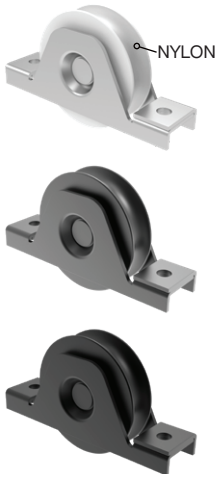

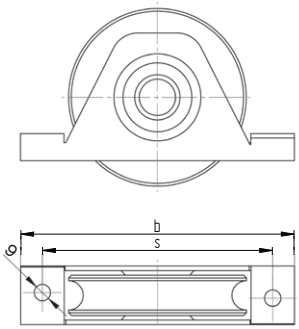

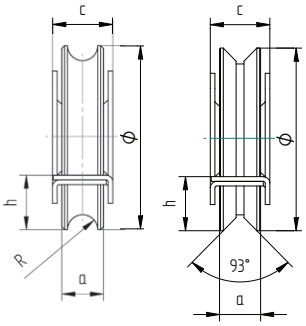

Quality	Finish	art.	Color	Ø	H	h	R	a	b	c	s	Gmax/2pcs (kg)				
Fe	Zn	H/38U-80C	-	78	37	28	8	20	135	32	110	250	✓	-	-	
		H/38U-80C-R9005	RAL 9005													new
		H/38U-80C-R7016	RAL 7016													new
AISI304	raw	H8/38U-80-R10	-				10	23								
		H8/38U-80-R10-NYLON						25			112					new
Fe	Zn	H/38U-100		98	40	32	8	22	150		127	300				
		H/38V-80C		78	37	28	-	20	135	34	112	250	-	✓	-	
		H/38V-80C-R9005	RAL 9005													new
		H/38V-80C-R7016	RAL 7016													new
AISI304	raw	H8/38V-80	-													
		H8/38V-80-NYLON			40	32		20		32						new
Fe	Zn	H/38V-100		98				22	150		127	300				

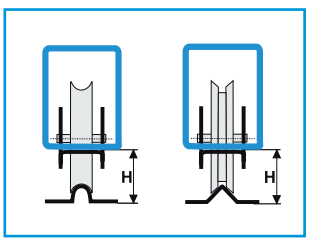

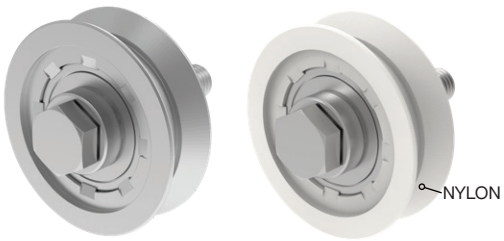

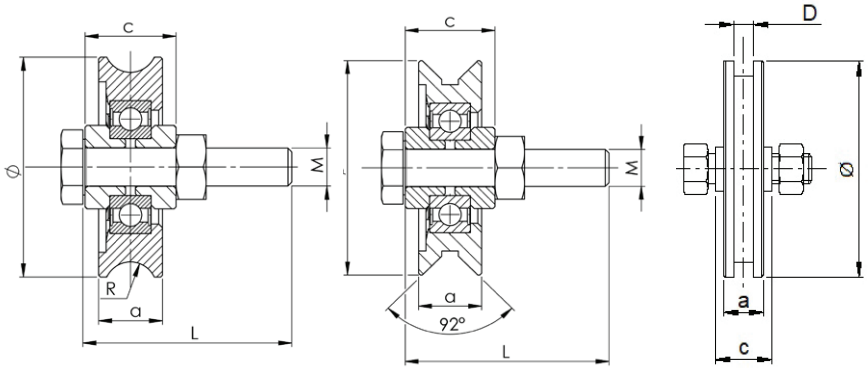

Quality	Finish	art.	Ø	R	D	a	c	L	M	Gmax/2pcs (kg)				
Fe	Zn	H/06U-60	58	8		17	27			200				
AISI304	raw	H8/06U-60-R10-NYLON		10		24								new
Fe	Zn	H/06U-80	78	8	-	20	28	55	10	300	✓	-	-	
AISI304	raw	H8/06U-80-R8												
		H8/06U-80-R10		10		25								
		H8/06U-80-R10-NYLON				24								new
Fe	Zn	H/06U-100	98	8		22	30	70	14	400				
		H/06V-60	58	-		17	27	55	10	200	-	✓	-	
AISI304	raw	H8/06V-60-NYLON												new
Fe	Zn	H/06V-80	78		-	20				300				
AISI304	raw	H8/06V-80												
		H8/06V-80-NYLON					28							new
Fe	Zn	H/06V-100	98			22	30	70	14	400				
		H/06V-100-2	100			25				700				
		H/06H-50C	50		5	15	27	40	8	120		-	✓	
		H/06H-80C	78		7	20	28	55	10	300				

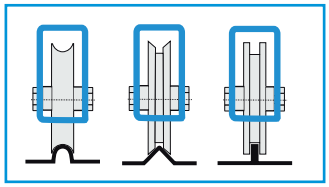

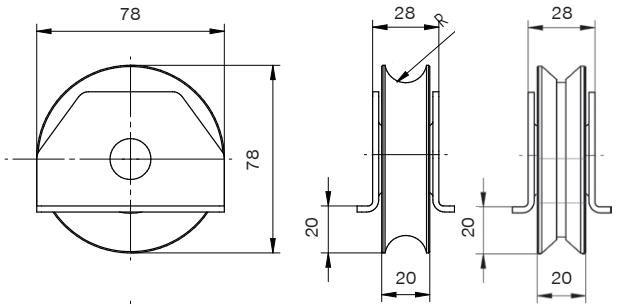

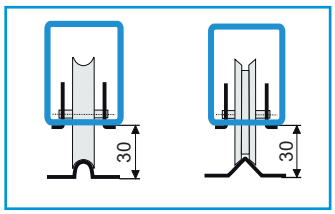

Quality	Finish	art.	R	Gmax/2pcs (kg)			
Fe	Zn	H/49U-80	8	250	✓	-	-
		H/49V-80	-	250	-	✓	-

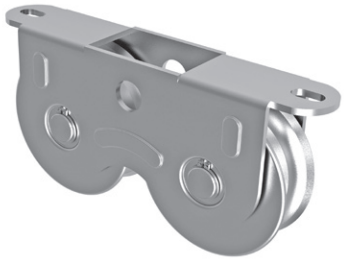

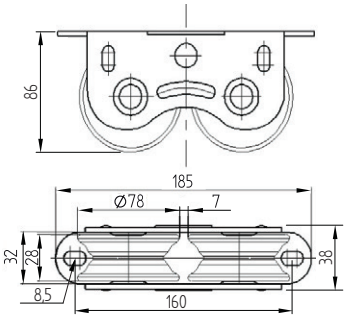

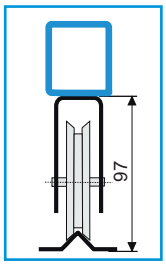

Quality	Finish	art.	Gmax/2pcs (kg)			
Fe	Zn	H/31V-2-80 HEAVY	600	-	✓	-

H/39V-...
H8/39V-...

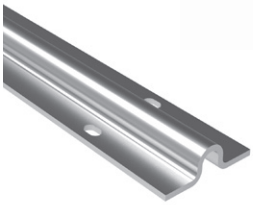

H/39U-...
H8/39U-...

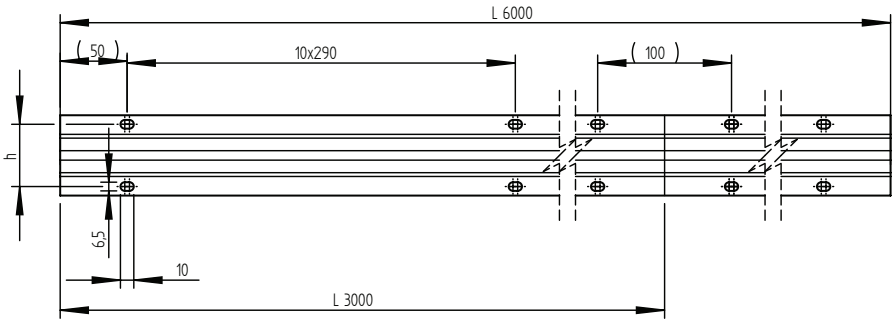

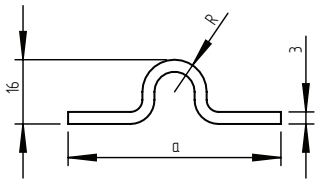

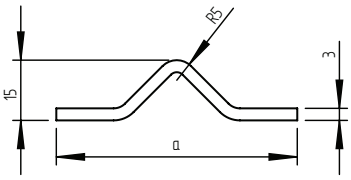

Quality	Finish	art.	a	h	R	L		
Fe	Zn	H/39U-3000	60	46,5	8	3000	✓	-
		H/39U-6000				6000		
AISI304	raw	H8/39U-3000	55	40	10	3000		
		H8/39U-6000				6000		
Fe	Zn	H/39V-3000	60	46,5	5	3000	-	✓
		H/39V-6000				6000		
AISI304	raw	H8/39V-3000				3000		
		H8/39V-6000				6000		

top

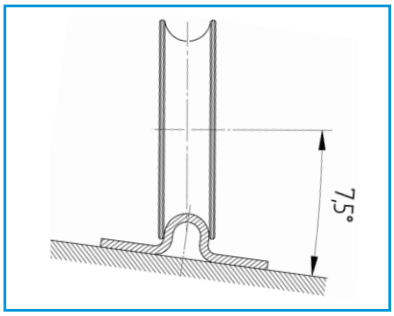

art.	I (V)	P (W)
DEVIICEGUARD 18	230V	18

Vyhrievací kábel/Heating cable

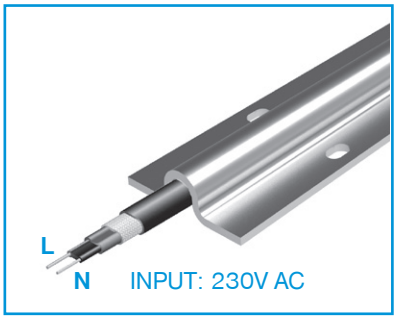

art.
Devi 19400126

new

Spojovacia sada/Connection set

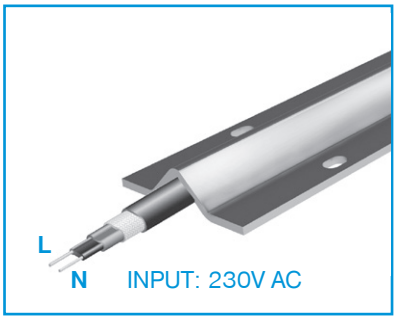

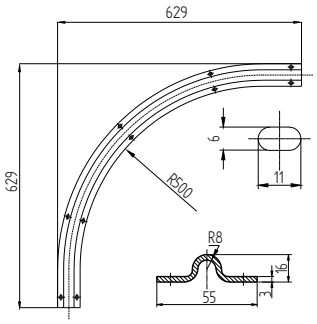

Quality	Finish	art.		
Fe	Zn	H/39U-630-CUR	✓	-

new

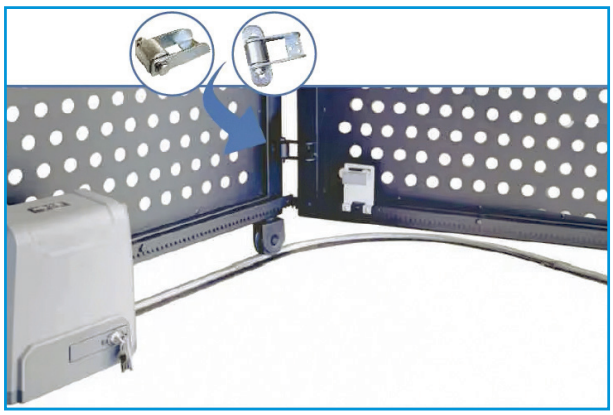

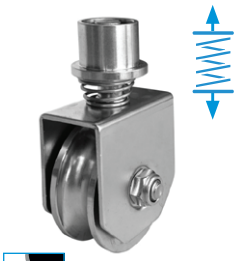

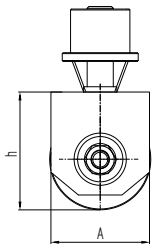

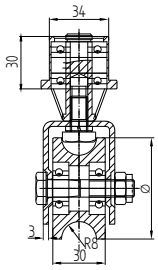

Quality	Finish	art.	Ø	h	A		
Fe	Zn	H/31U-60-SP	58	67,5	56,5	✓	-
		H/31U-80-SP	78	87,5	76,5		

new
new

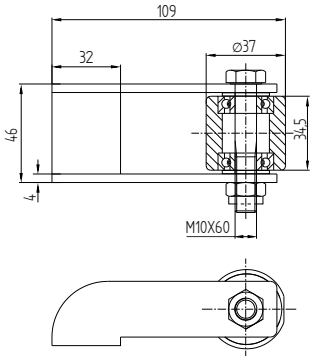

Quality	Finish	art.
Fe	Zn	D4/91-D37

new

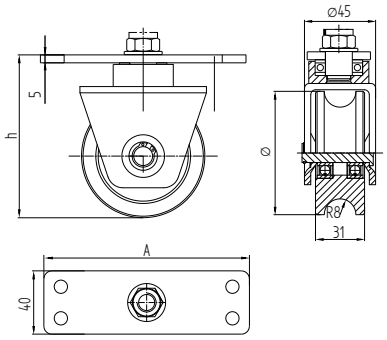

Quality	Finish	art.	Ø	h	A		
Fe	Zn	H/31U-60-PL	58	85	100	✓	-
		H/31U-80-PL	78	103	130		

new
new

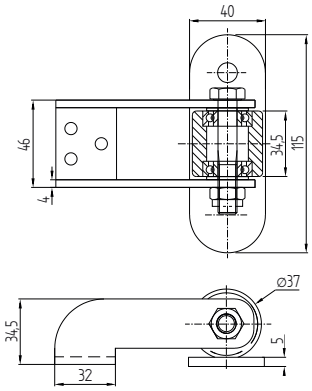

Quality	Finish	art.
Fe	Zn	D4/92-D37

new

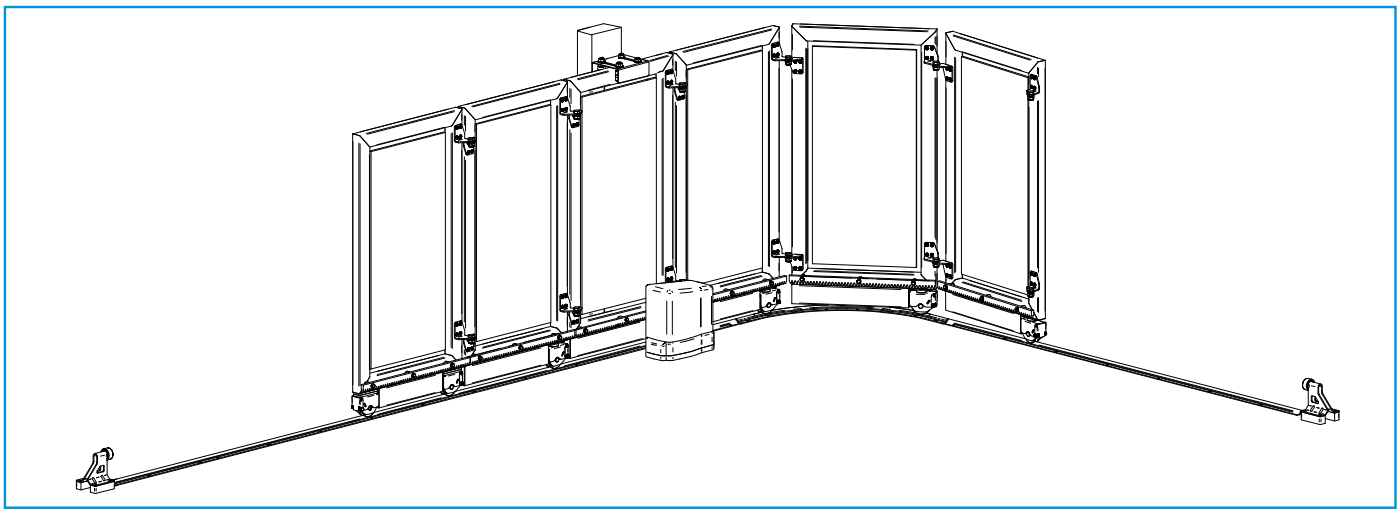

3 POSUVNÉ BRÁNY - PRÍSLUŠENSTVO
SLIDING GATES - ACCESORIES

HORNÉ VEDENIA
UPPER GUIDE BRACKETS

DORAZY
STOPPERS

ZÁMKY
LOCKS

HREBENE
RACKS

TELESKOPICKÝ SYSTÉM
TELESCOPIC SYSTEM

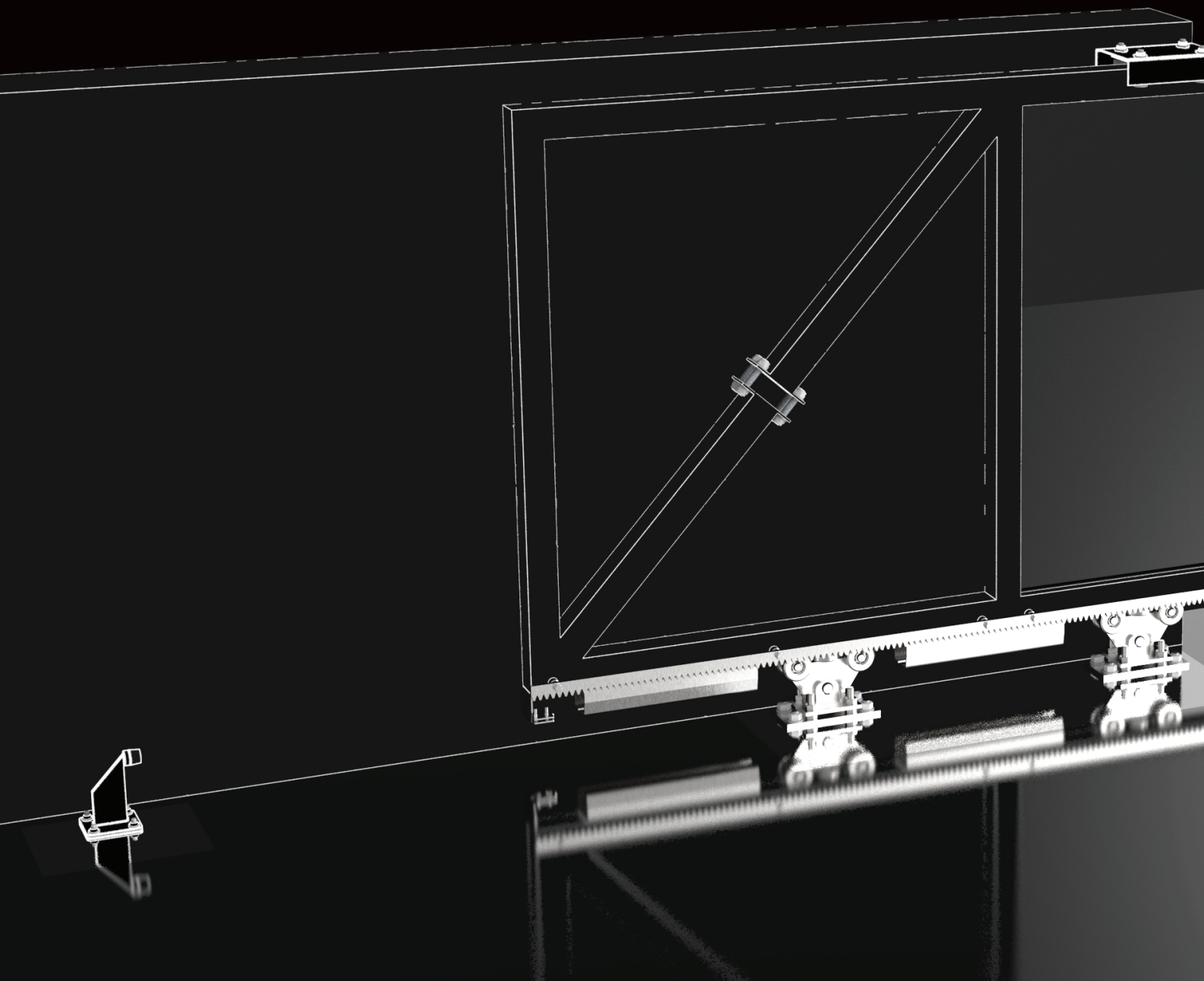

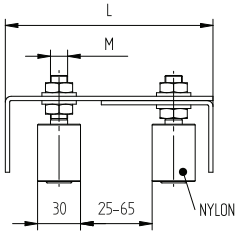

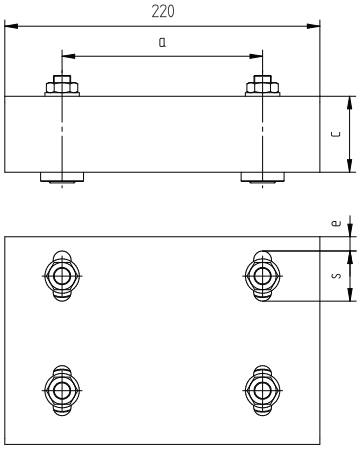

Quality	Finish	art.	Color	L	a	c	e	s	M	
Fe	Zn	H/12-4T	-	140-180	140	53	10	35	12	
		H/12-4T-R9005	RAL 9005							new
		H/12-4T-R7016	RAL 7016							new
AISI304	raw	H8/12-4T	-	135-175	155	56	16	58	14	

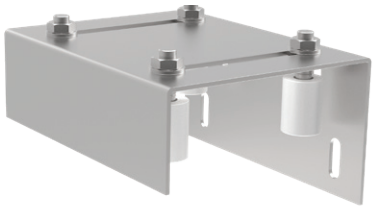

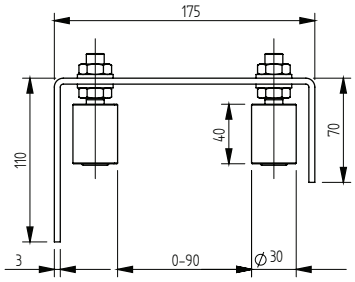

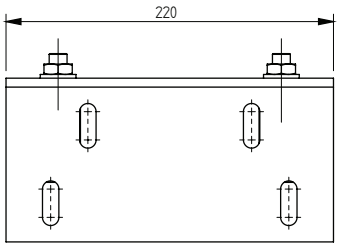

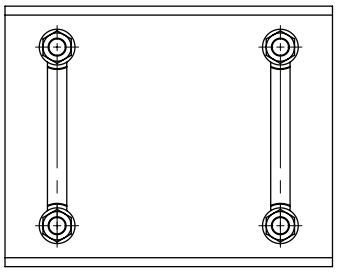

Quality	Finish	art.
Fe	Zn	H/12-4

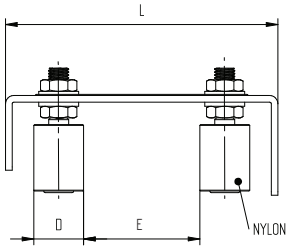

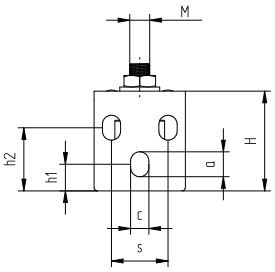

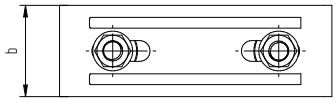

Quality	Finish	art.	Color	L	a	b	c	D	E	h1	h2	H	s	M	
Fe	Zn	H/12-2	-	165	-	68	-	41	25-65	-	-	64	-	16	
		H/12-2S		164	15	57	11	30	35-85	14	36	60	34	12	top
		H/12-2S-R9005	RAL 9005												new
		H/12-2S-R7016	RAL 7016												new
AISI304	raw	H8/12-2S	-												

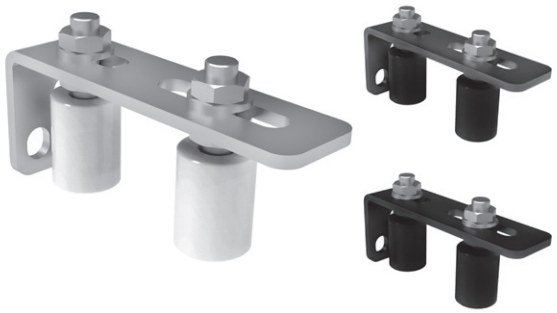

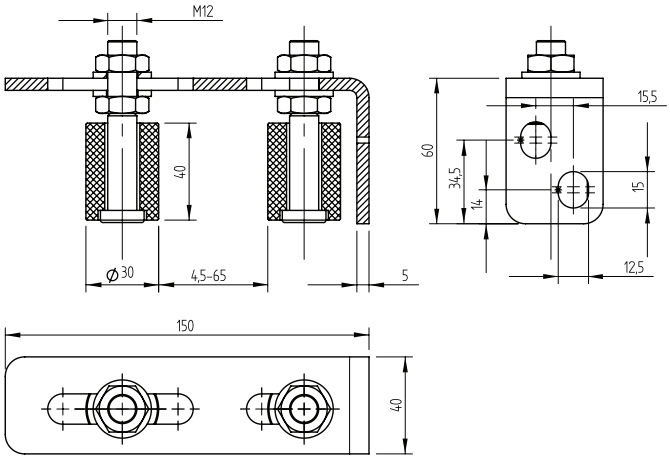

Quality	Finish	art.	Color
Fe	Zn	H/53-2	-
		H/53-2-R9005	RAL 9005
		H/53-2-R7016	RAL 7016

new
new

H/53-30W

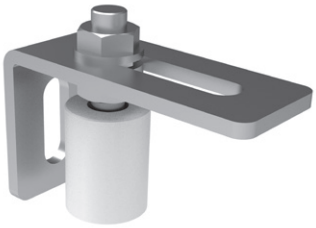

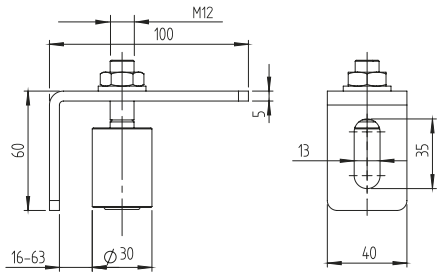

Quality	Finish	art.	
Fe	Zn	H/53-30W	U/40x40

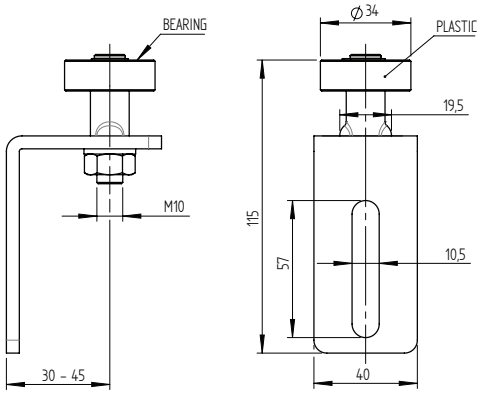

Quality	Finish	art.	Color	
Fe	Zn	H/53	-	U/40x40
		H/53-R9005	RAL 9005	
		H/53-R7016	RAL 7016	
AISI304	raw	H8/53	-	

top
new
new

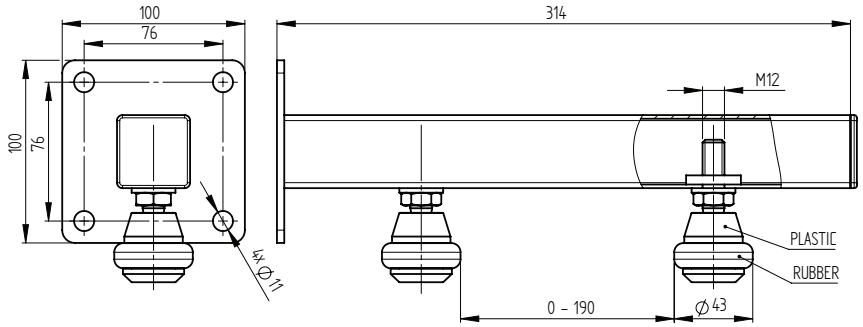

Quality	Finish	art.
Fe	Zn	H/52-2

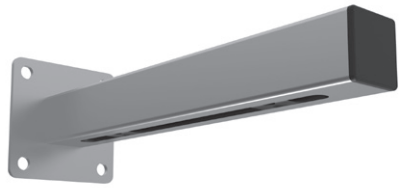

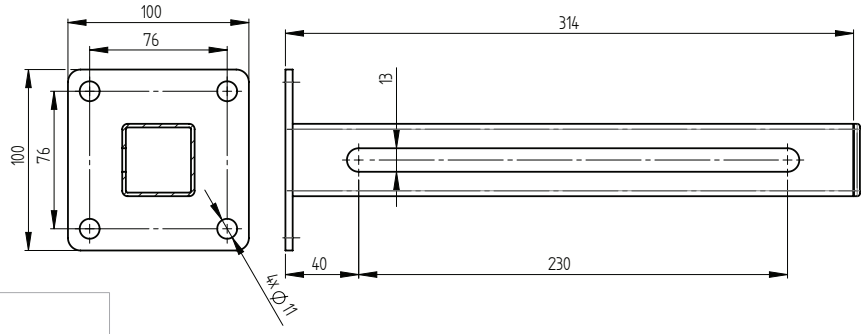

Quality	Finish	art.	
Fe	Zn	H/52-40x40	H/04-25-W, H/04-30-B H/04-30-W H/04-32-W, H/04G-43 H8/04-22-W, H8/04-32-W
AISI304	raw	H8/52-40x40	

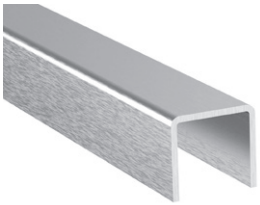

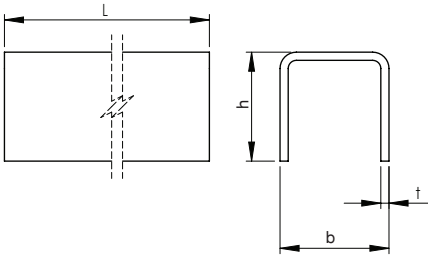

Quality	Finish	art.	bxh	t	L		
AISI304	raw	A/6900-024-2500	28x26	2	2500	H8/04-22-W	
		A/6900-024-5000			5000		
		A/U40x40x3-3000	40x40	3	3000	H/04-30… H/04-32-W H8/04-32-W	new
		A/U40x40x3-6000			6000		new
Fe		U/40x40x3-3000			3000		
		U/40x40x3-6000			6000		
ALUMINIUM	natural	AL/U40x40x3-6000					new
AISI304	raw	A/U50x50x3-3000	50x50		3000	H/04-42… H/04G-43 H/04L-42	new
		A/U50x50x3-6000			6000		new
Fe		U/50x50x3-3000			3000		new
		U/50x50x3-6000			6000		
ALUMINIUM	natural	AL/U50x50x3-6000					new

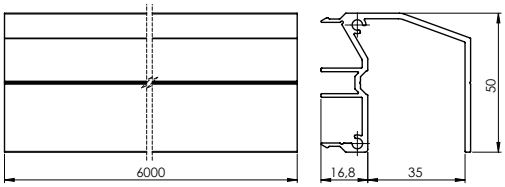

Quality	Finish	art.	
ALUMINIUM	natural	AL/RP-6005-6000-N	H8/04-32-W, H8/04L-35

new

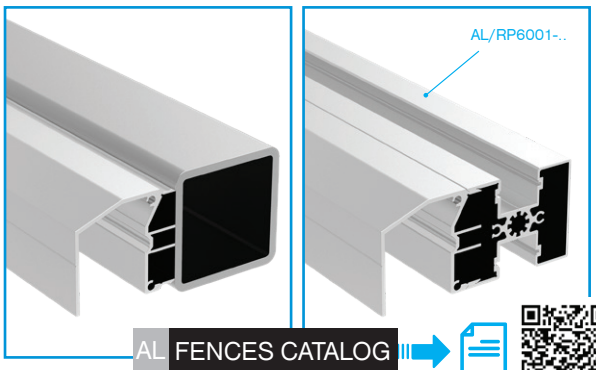

AL FENCES CATALOG

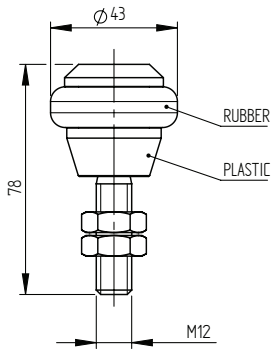

Quality	Finish	art.		
Fe	Zn	H/04G-43	-	U/50x50
AISI304	raw	H8/04G-43		

top
new

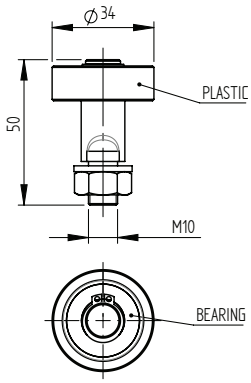

Quality	Finish	art.		
Fe	Zn	H/04L-35	✓	U/40x40 AL/RP-6005-6000-N
AISI304	raw	H8/04L-35		

new

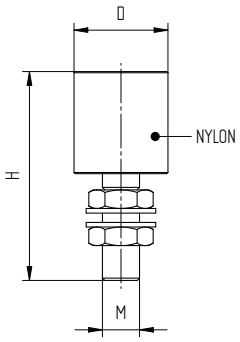

Quality	Finish	art.	Nylon Color		D	H	M	
AISI304	raw	H8/04-22-W	White	-	22	75	12	A/6900-024-..
Fe	Zn	H/04-25-W	White	-	25			-
		H/04-30-W	White	-	30			U/40x40
		H/04-30-B	Black					
		H/04-32-W	White	-	32			
AISI304	raw	H8/04-32-W	White					AL/RP-6005-6000-N
Fe	Zn	H/04L-40-W	White	✓	40	90	16	U/50x50
		H/04-42-W	White	-	41			
		H/04-42-B	Black					

top
top

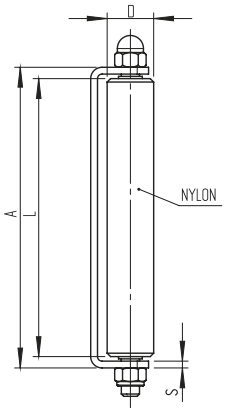

Quality	Finish	art.	Nylon Color	A	D	L	M	s	
Fe	Zn	H/21-76W	White	95	62	76	1/2"	5	new
		H/21-152W		168		152			new
		H/21-250W		265	41	250	16	6	
		H/21-305B	Black	320	66	305	1/2"	5	
		H/21-305W	White						

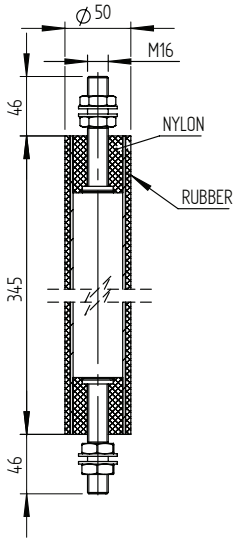

Quality	Finish	art.
Fe	Zn	H/29-V

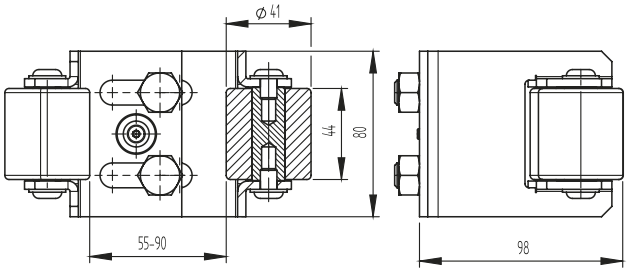

Quality	Finish	art.
Fe	Zn	H/37-55-90

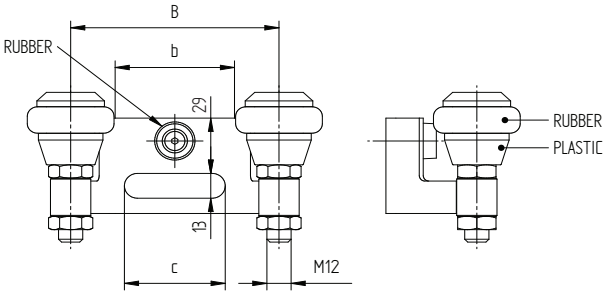

Quality	Finish	art.	Color	b	c	B	
Fe	Zn	H/37-40P	-	40	50	83	top
		H/37-40P-R9005	RAL 9005				new
		H/37-40P-R7016	RAL 7016				new
AISI304	raw	H8/37-40P	-				
Fe	Zn	H/37-60P	-	60	50	103	
		H/37-60P-R9005	RAL 9005				new
		H/37-60P-R7016	RAL 7016				new
AISI304	raw	H8/37-60P					
Fe	Zn	H/37-80P		80	60	123	

H/16-46x130
H8/16-46x130

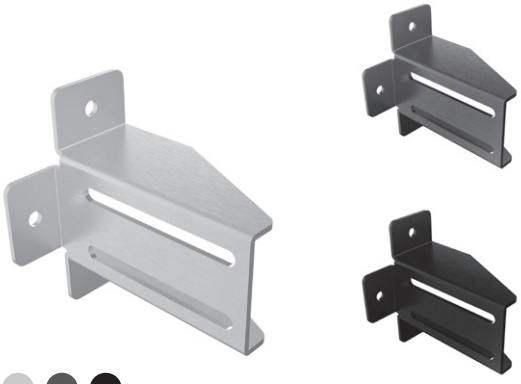

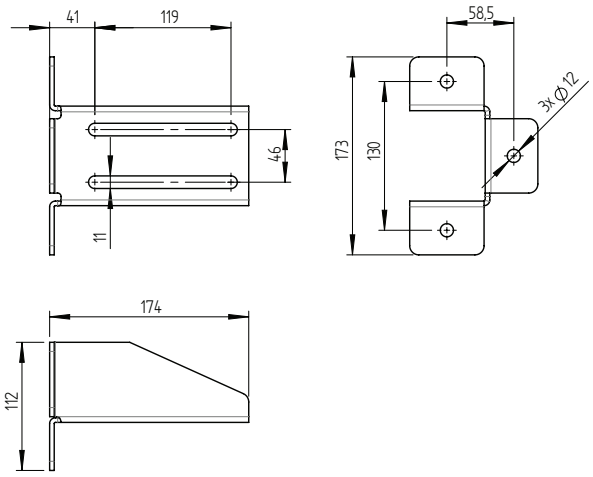

Quality	Finish	art.	Color	
Fe	Zn	H/16-46x130	-	
		H/16-46x130-R9005	RAL 9005	new
		H/16-46x130-R7016	RAL 7016	new
AISI304	raw	H8/16-46x130	-	

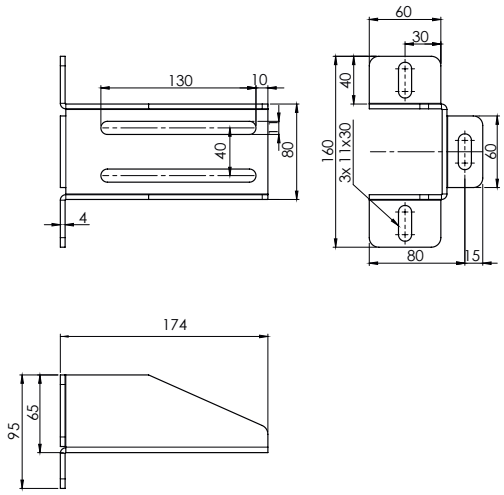

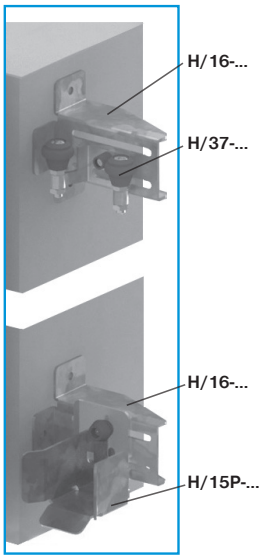

Quality	Finish	art.	
Fe	Zn	H/16-40x130-S	new

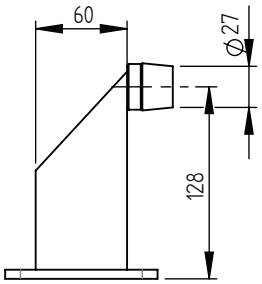

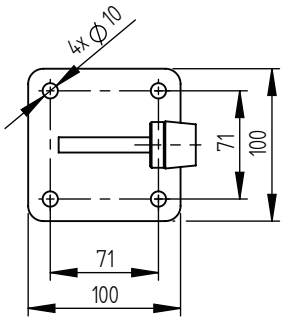

Quality	Finish	art.	Color	
Fe	Zn	H/10B-60x130	-	
		H/10B-60x130-R9005	RAL 9005	new
		H/10B-60x130-R7016	RAL 7016	new
AISI304	raw	H8/10B-60x130	-	

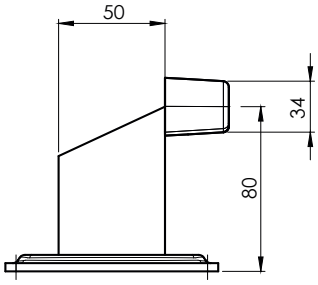

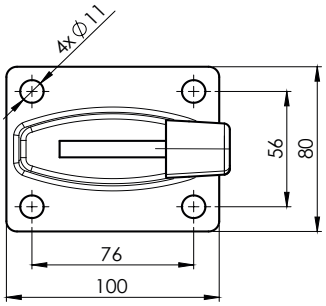

Quality	Finish	art.	Color	
Fe	Zn	H/10B-50x80	-	
		H/10B-50x80-R9005	RAL 9005	new
		H/10B-50x80-R7016	RAL 7016	new

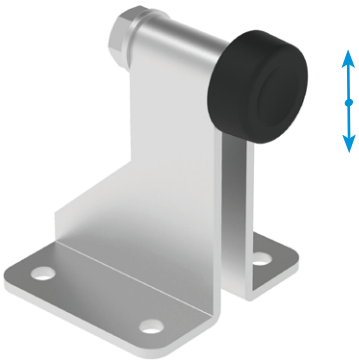

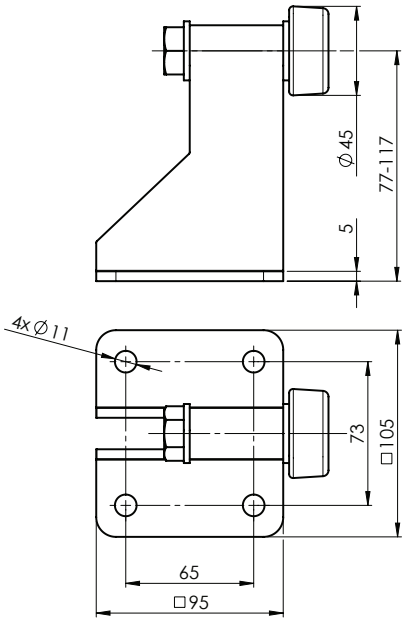

Quality	Finish	art.	
Fe	Zn	H/10B-50x120	new

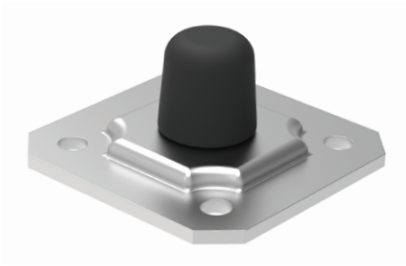

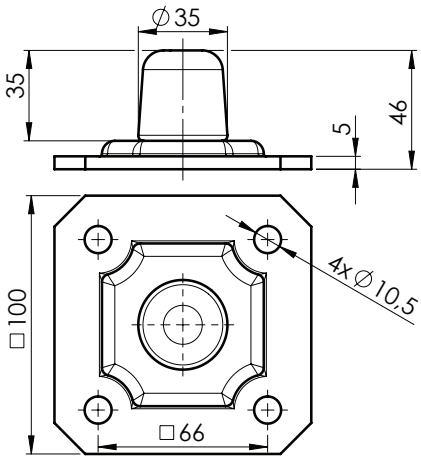

Quality	Finish	art.
Fe	Zn	H/10B-35x46

new

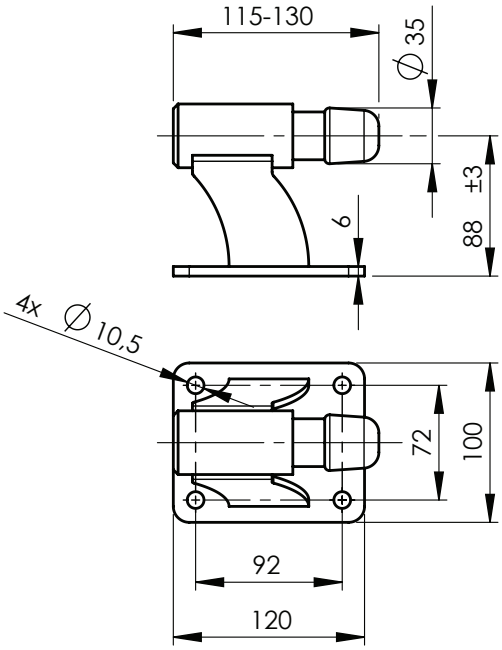

Quality	Finish	art.
Fe	Zn	H/10B-130x85-SPRING

new

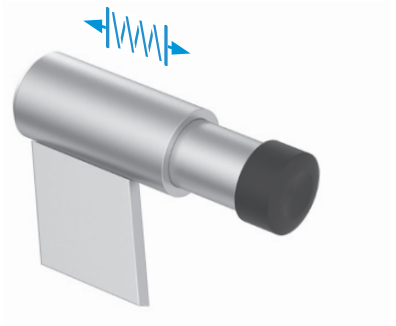

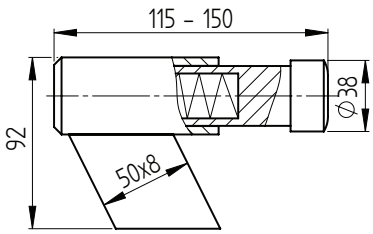

Quality	Finish	art.
Fe	Zn	H/10BP-150x92-SPRING

new

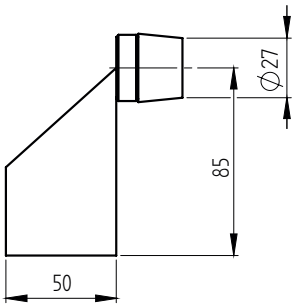

Quality	Finish	art.
Fe	Zn	H/10BP-50x100

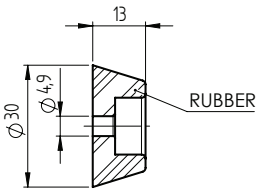

Quality	Finish	art.
Rubber	black	B1/16G

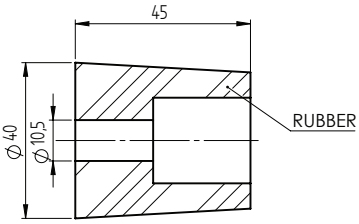

Quality	Finish	art.
Rubber	black	B1/16G-B

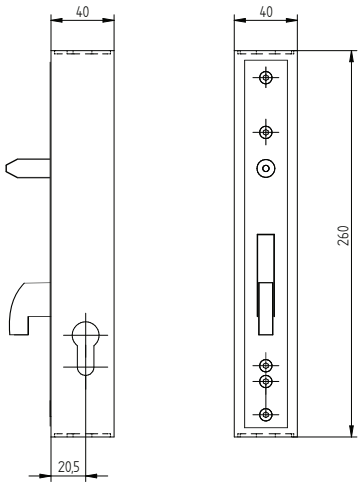

Quality	Finish	art.
Fe	raw	H/46-40x40

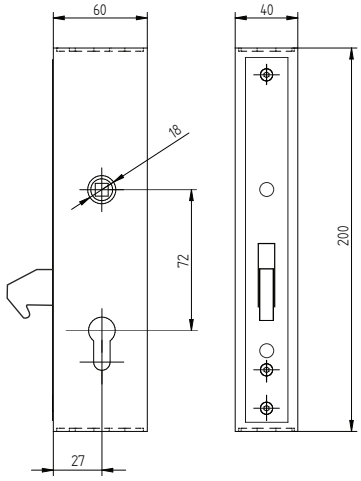

Quality	Finish	art.
Fe	raw	H/46-60x40

D	-	-	-	D17	D17	D19	-	19	D19,5
Hmax	26	15	18	15	17	17	15	30	35
Model	K01	K02	K03	K11	K12	K13	K21	K22	K23
H/35K		✓					✓		
H/36-30K		✓	✓	✓	✓		✓		
H/36-40K	✓	✓	✓	✓	✓		✓		
H/36-20K		✓					✓		
H8/36-20K		✓					✓		
H/46-40x40							✓		
H/46-60x40		✓	✓	✓	✓		✓		

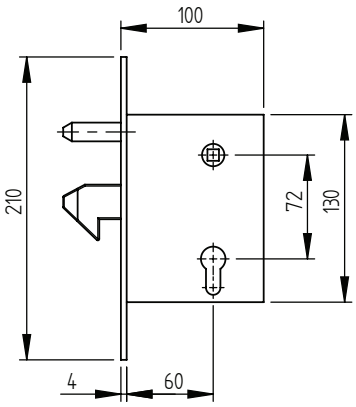

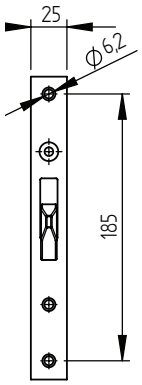

Quality	Finish	art.	
Fe	Zn	**H/35-64A**	H/35-K

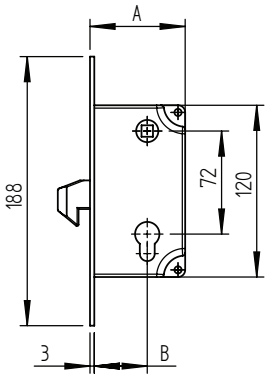

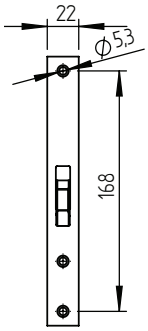

Quality	Finish	art.	A	B	
Fe	Zn	**H/36-30A**	56	27	H/36-30K
		H/36-40A	66,5	37	H/36-40K

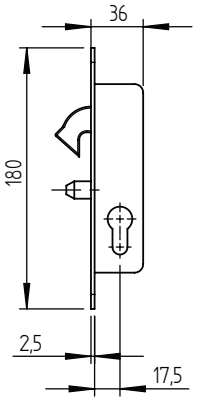

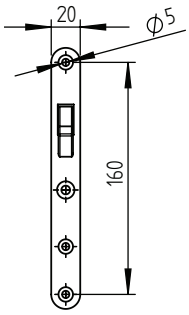

Quality	Finish	art.	
Fe	Zn	**H/36-20A**	H/36-20K H8/36-20K

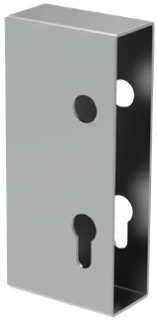

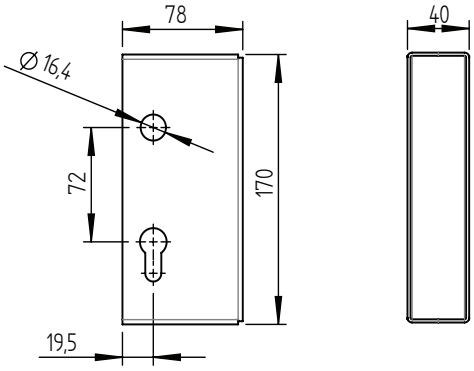

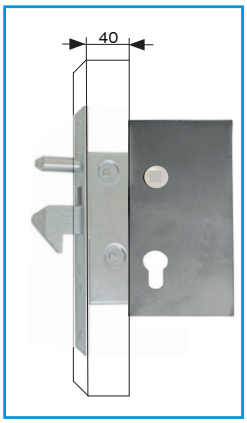

Quality	Finish	art.
Fe	Zn	H/35-K

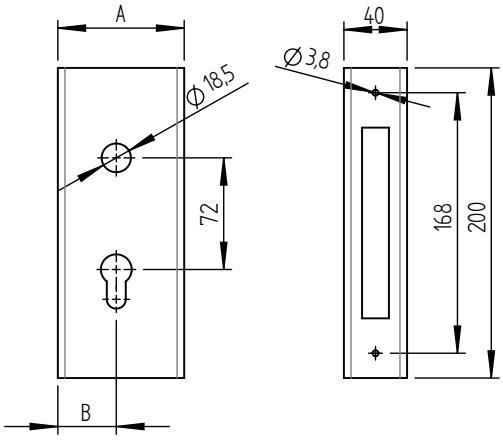

Quality	Finish	art.	A	B
Fe	raw	H/36-30K	60	27
		H/36-40K	80	37

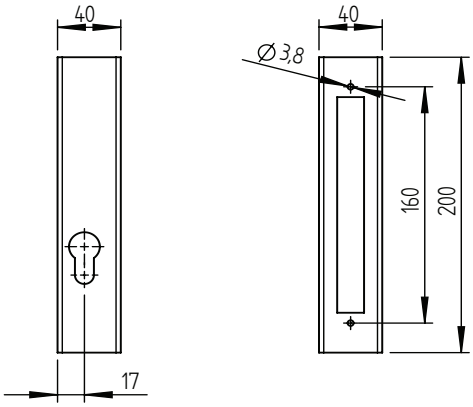

Quality	Finish	art.
Fe	raw	H/36-20K
AISI304	satin	H8/36-20K

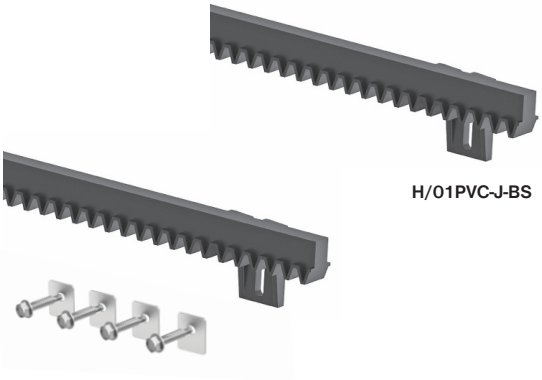

H/01PVC-J-BS

H/01PVC-J

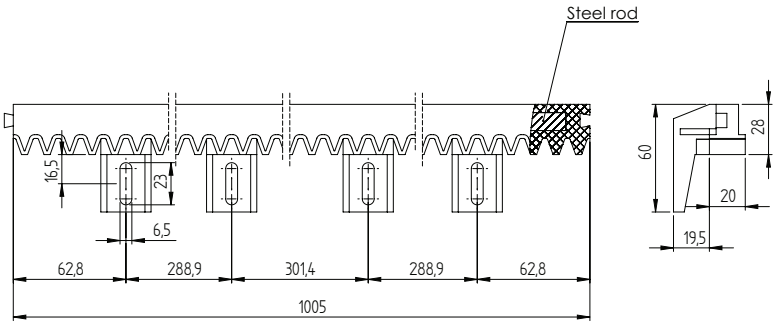

Quality	Finish	art.	Module	Gmax (kg)	H/01PVC-J-BS	H/01PVC-FS-J	
PVC	raw	H/01PVC-J-BS	4	300	1x	-	top
		H/01PVC-J				1x	
		H/01PVC-J-2PACK			2x	2x	new

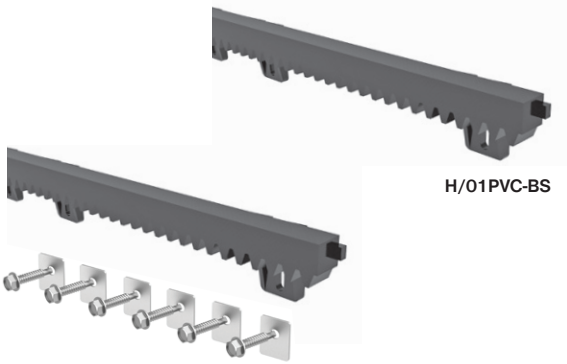

H/01PVC-BS

H/01PVC

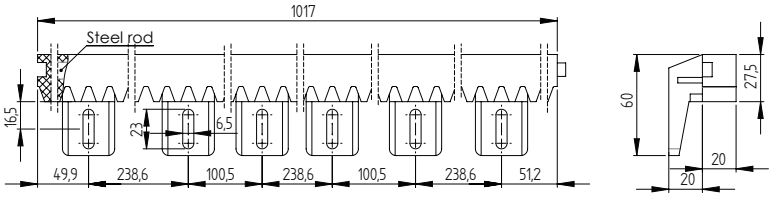

Quality	Finish	art.	Module	Gmax (kg)	H/01PVC-J-BS	H/01PVC-FS-J	
PVC	raw	H/01PVC-BS	4	700	1x	-	
		H/01PVC				1x	
		H/01PVC-2PACK			2x	2x	new

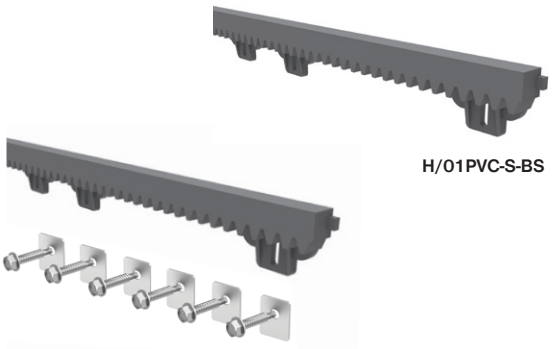

H/01PVC-S-BS

H/01PVC-S

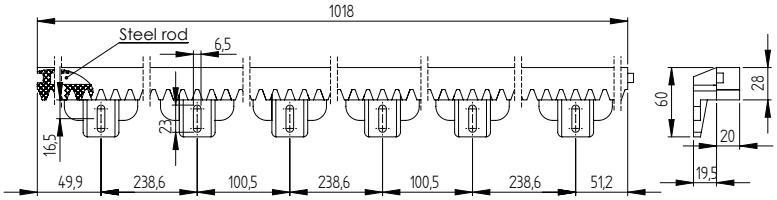

Quality	Finish	art.	Module	Gmax (kg)	H/01PVC-FS
PVC	raw	H/01PVC-S-BS	4	1200	-
		H/01PVC-S			1x

H/01PVC-UP-BS

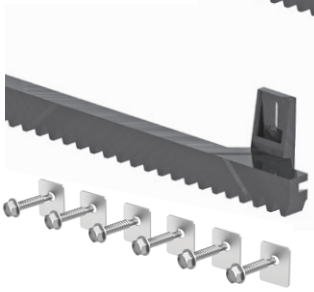

H/01PVC-UP

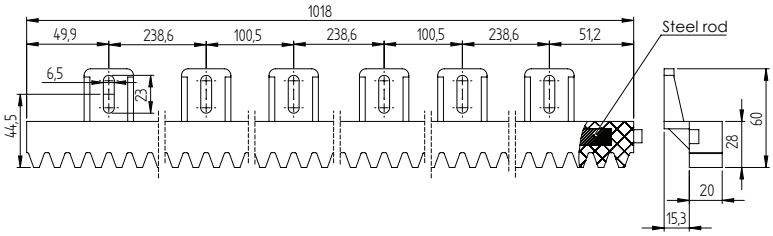

Quality	Finish	art.	Module	Gmax (kg)	H/01PVC-FS
PVC	raw	H/01PVC-UP-BS	4	700	-
		H/01PVC-UP			1x

H/01PVC-FS

H/01PVC-FS-J

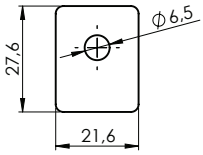

Quality	Finish	art.
Fe	Zn	H/01PVC-FS
		H/01PVC-FS-J

new

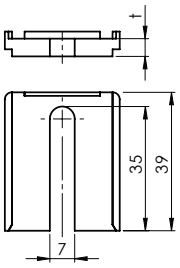

Quality	Finish	art.	t	package includes
PVC	raw	A19/01PVC-05	5	6 pcs
		A19/01PVC-10	10	

new
new

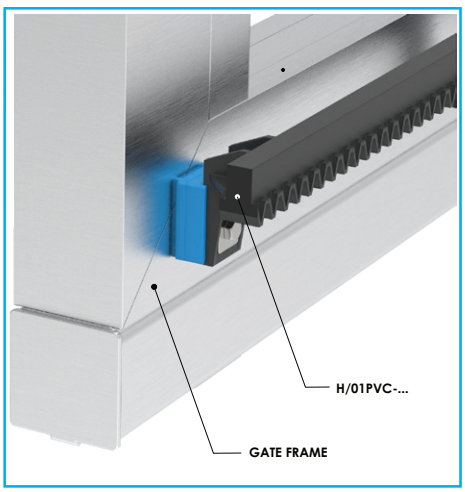

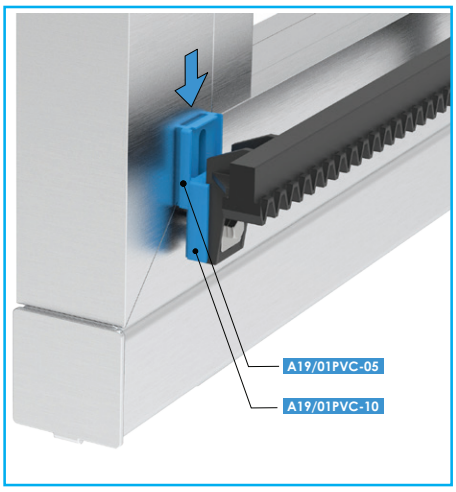

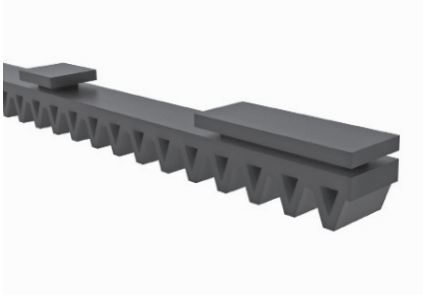

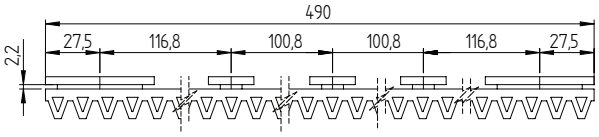

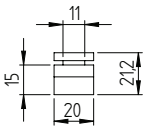

Quality	Finish	art.	Gmax (kg)
NYLON	raw	H/01PVC-AL	300

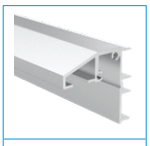

AL/RP-6004-...

H/01PVC-AL-K

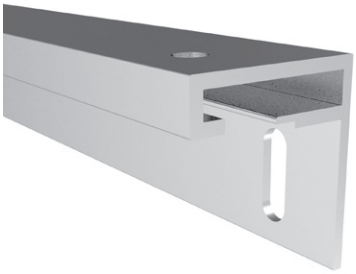

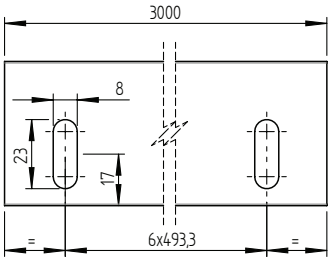

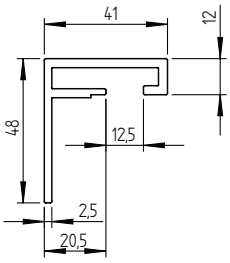

Quality	Finish	art.
ALUMINIUM	natural	H/01PVC-AL-K

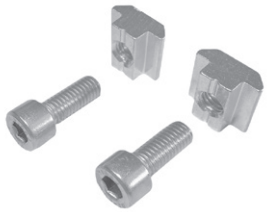

Quality	Finish	art.
Fe	Zn	H/01PVC-FS-AL

new

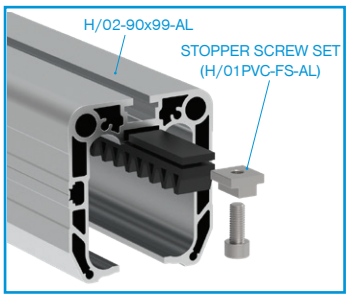

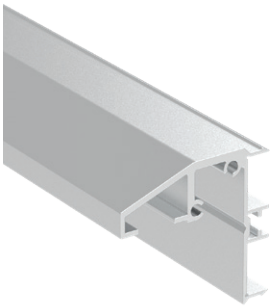

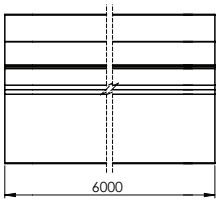

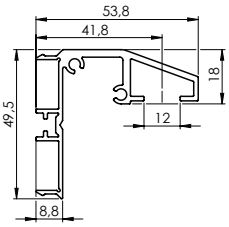

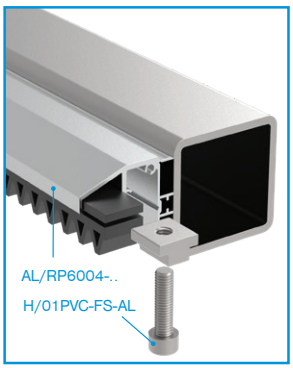

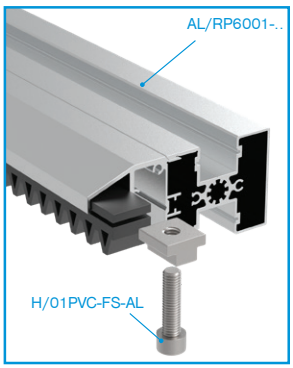

Quality	Finish	art.
ALUMINIUM	natural	AL/RP-6004-6000-N

new

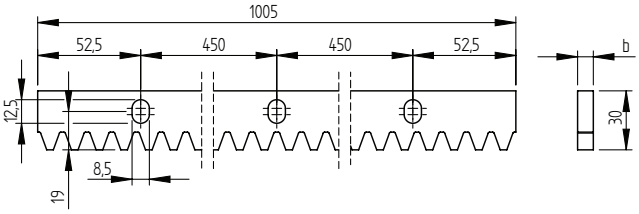

Quality	Finish	art.	Module	h x b	Gmax (kg)	
Fe	Zn	H/01Fe-30x8H	4	30x8	1200	3x
AISI304	raw	H8/01-30x8H				
Fe	Zn	H/01Fe-30x10H		30x10	1500	
		H/01Fe-30x12H		30x12	1700	

top

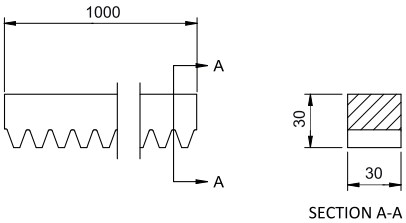

Quality	Finish	art.	Module	Gmax (kg)	
Fe	Zn	H/01Fe-30x30H	6	5000	-

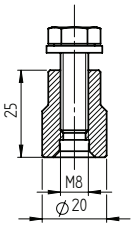

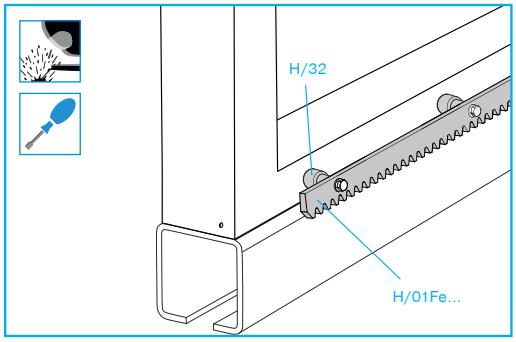

Quality	Finish	art.
Fe	Zn	H/32
AISI304	raw	H8/32

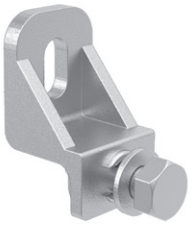

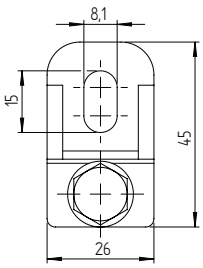

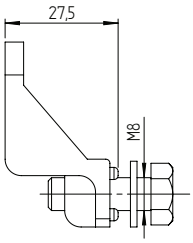

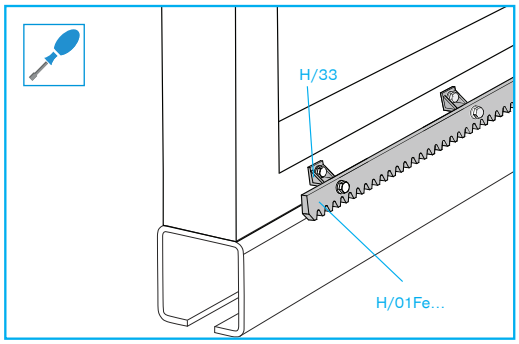

Quality	Finish	art.
Fe	Zn	H/33

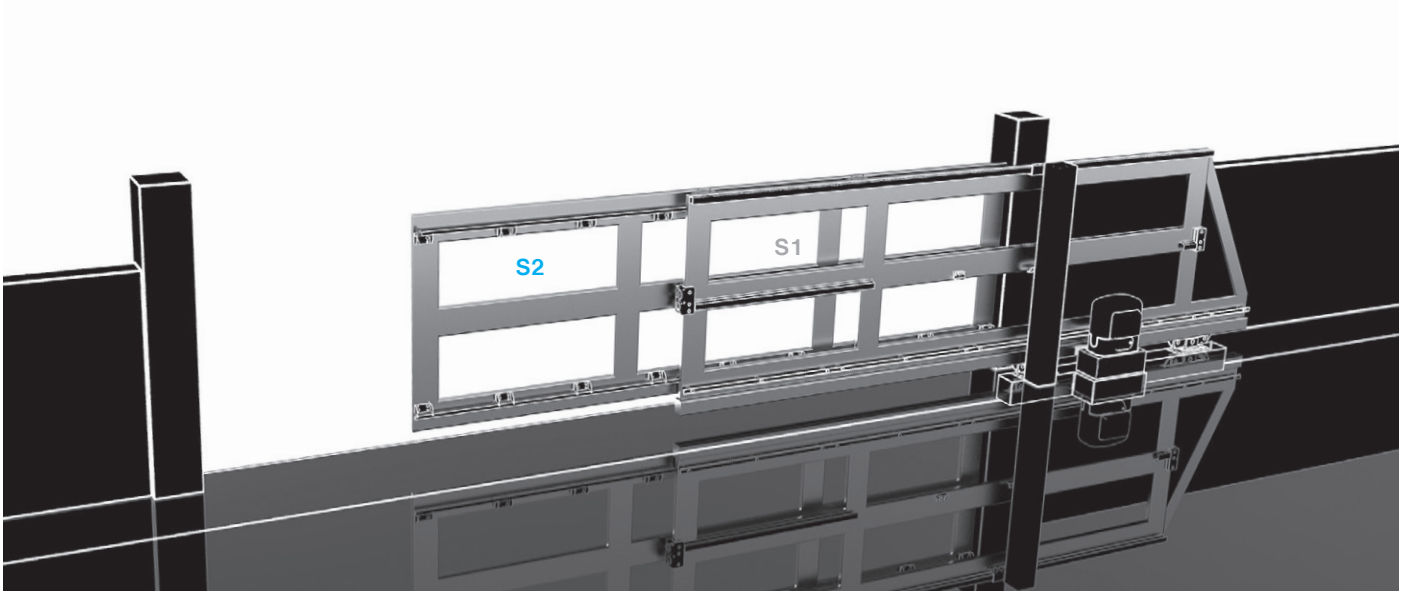

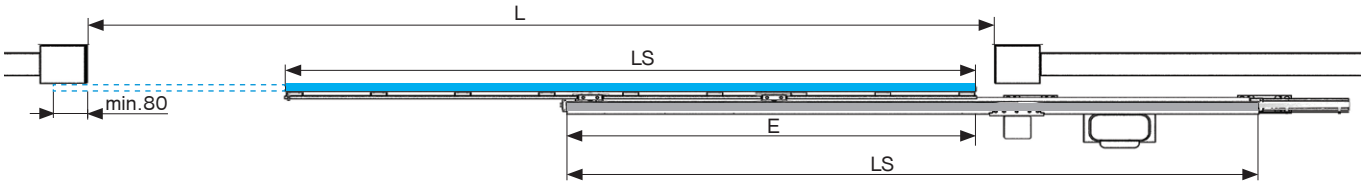

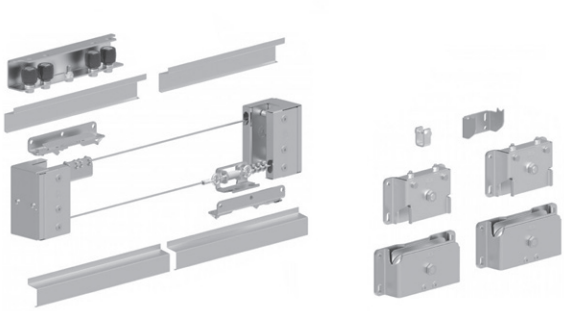


SV-...


H/10B...

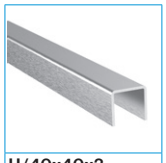
U/40x40x3-..
A/U40x40x3-..
AL/U40x40x3-..


A/20-6000


H/37...

Quality	Finish	art.	max L	TS-CS8-ECO	LV-2C8-250-ECO
Fe	Zn	TS-C2-8	8000	1x	1x

L	LS	E	max S2 (kg)
3500	2690	900	250
4000	3060	1020	
4500	3440	1150	
5000	3810	1270	
5500	4190	1400	
6000	4560	1520	
6500	4940	1650	
7000	5310	1770	
7500	5690	1900	
8000	6060	2020	

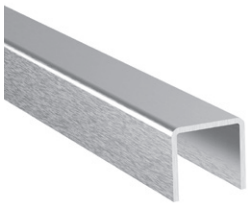

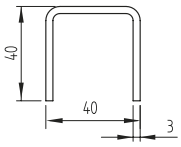

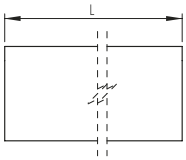

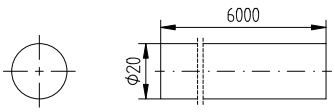

Quality	Finish	art.	L
Fe	raw	U/40x40x3-3000	3000
		U/40x40x3-6000	6000
AISI304		A/U40x40x3-3000	3000
		A/U40x40x3-6000	6000
ALUMINIUM	natural	AL/U40x40x3-6000	

new
new
new

Quality	Finish	art.
AISI304	raw	A/20-6000

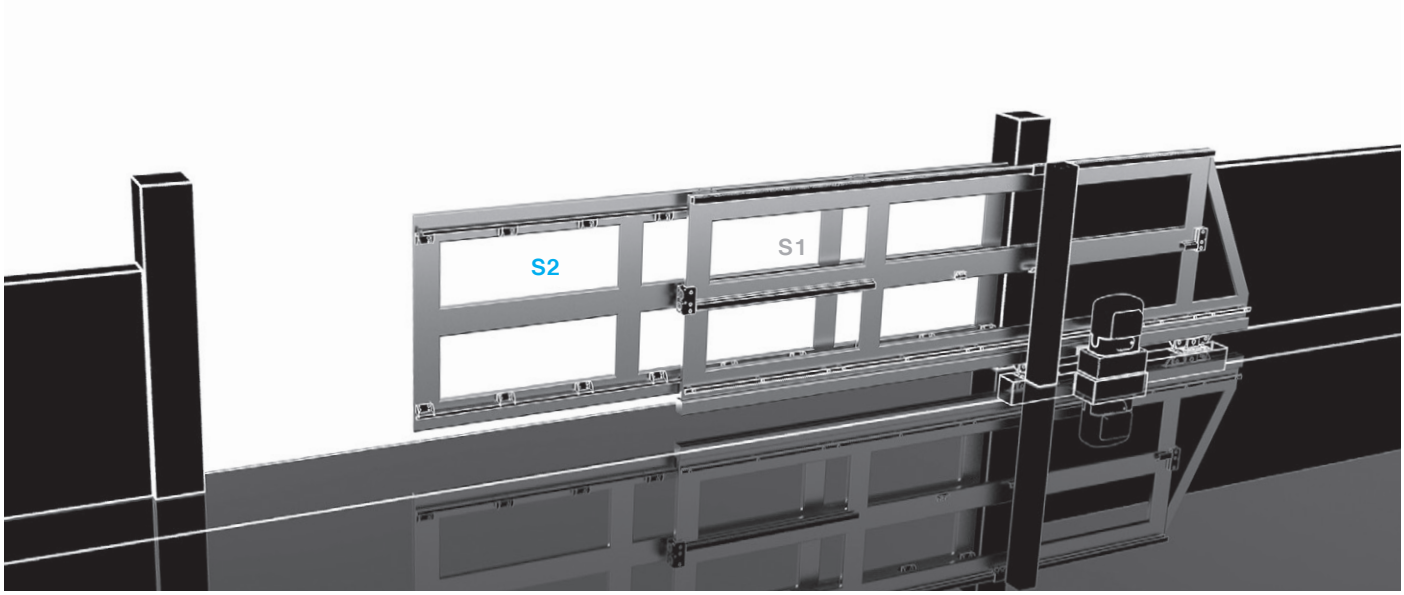

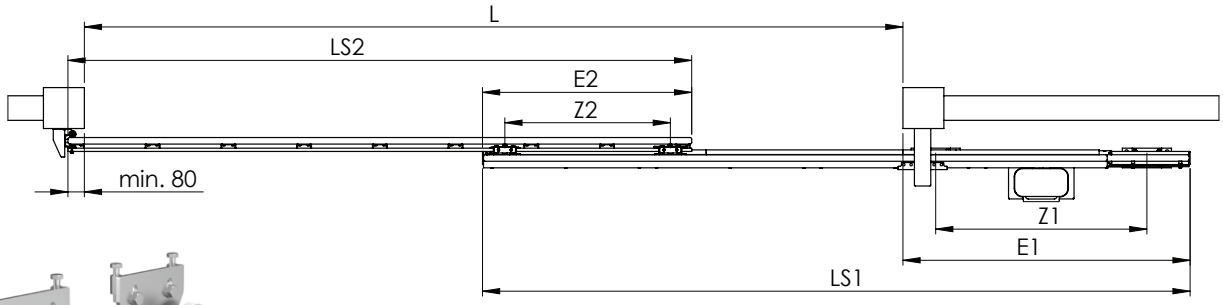

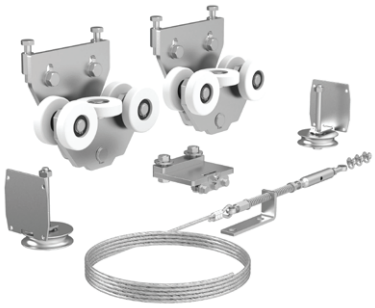

Quality	Finish	art.	max L
ALUMINIUM	natural	TS-C2-8-AL	8000

new

L	Ls1	E1	Z1	Ls2	E2	Z2	m2	m1+m2
4	4,6	2,6	2,1	3,4	1,4	1	125	250
4,5	4,95	2,7	2,2	3,75	1,5	1,1	120	240
5	5,2	2,7	2,2	4,05	1,55	1,15	115	230
5,5	5,45	2,7	2,2	4,35	1,6	1,2	110	220
6	5,7	2,7	2,2	4,7	1,7	1,3	105	210
6,5	5,95	2,7	2,2	5	1,75	1,35	100	200
7	6,2	2,7	2,2	5,3	1,8	1,4	95	190
7,5	6,45	2,7	2,2	5,65	1,9	1,5	90	180
8	6,7	2,7	2,2	6	2	1,6	85	170


SV-90x95-AL

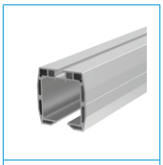
H/02-90x95...


H8/10B...


H8/12...


H8/37...

Quality	Finish	art.	max L
Fe	Zn	TS-C2-8-U	8000

new

L	Ls1	E1	Z1	Ls2	E2	Z2	m2	m1+m2
4	4,6	2,6	2,1	3,4	1,4	1	150	300
4,5	4,95	2,7	2,2	3,75	1,5	1,1	145	290
5	5,2	2,7	2,2	4,05	1,55	1,15	140	280
5,5	5,45	2,7	2,2	4,35	1,6	1,2	135	270
6	5,8	2,8	2,3	4,7	1,7	1,3	130	260
6,5	6,05	2,8	2,3	5	1,75	1,35	125	250
7	6,3	2,8	2,3	5,3	1,8	1,4	120	240
7,5	6,55	2,8	2,3	5,6	1,85	1,45	115	230
8	6,8	2,8	2,3	5,9	1,9	1,5	110	220


SV-80x80Zn clasic

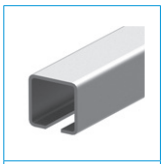
H/02-80x80-Zn...


H8/10B...


H8/12...


H8/37...

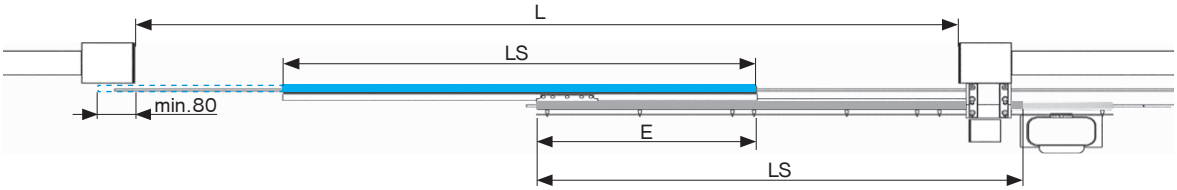

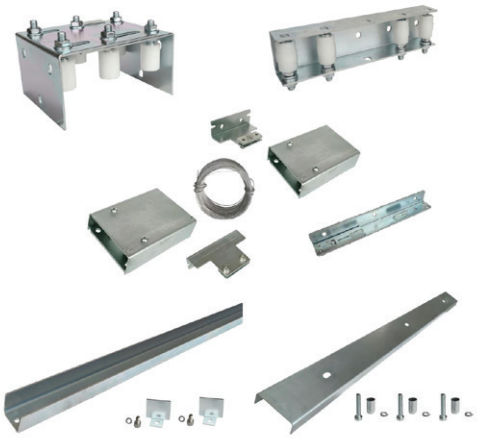

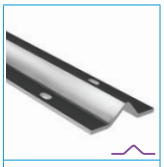
H/39V-...
H8/39V-...

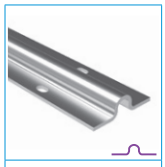
H/39U-...
H8/39U-...

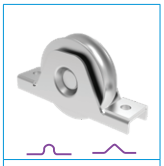
H/38...
H8/38...

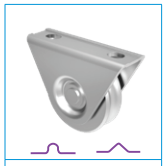
H/31...
H8/31...


H/37...


H/10B...

Quality	Finish	art.	max L	
Fe	Zn	TS-S2-4-N	4000	new
		TS-S2-8-N	8000	new
		TS-S2-15-N	15000	new

L	LS	min E	max S2 (kg)
3000	1890	350	300
4000	2390		
5000	2890		
6000	3390		
7000	3890		
8000	4390		
9000	5140	600	400
10000	5640		
11000	6140		
12000	6640		
13000	7140		
14000	7640		
15000	8140		

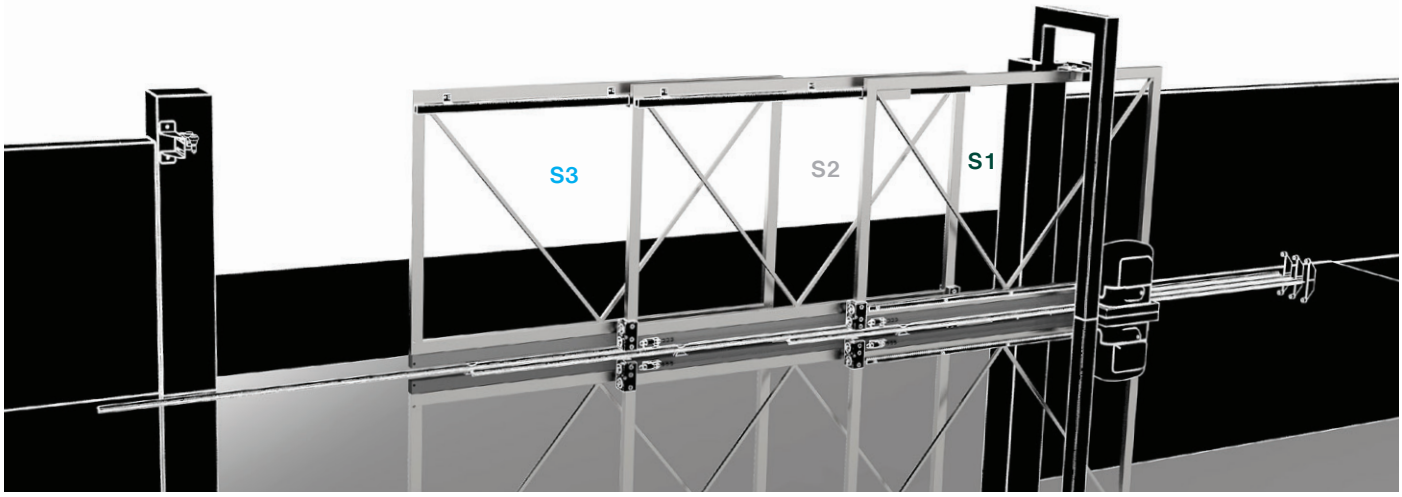

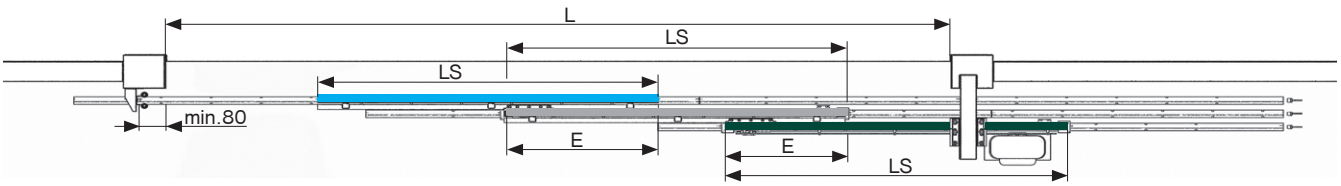

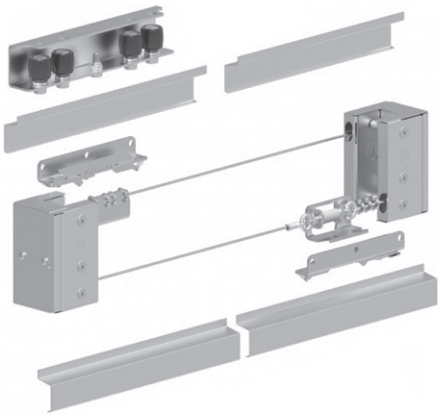

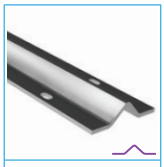
H/39V-...
H8/39V-...

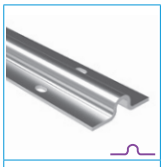
H/39U-...
H8/39U-...

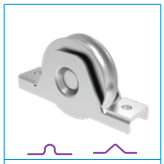
H/38...
H8/38...

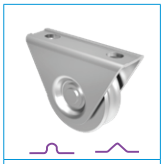
H/31...
H8/31...


H/12...

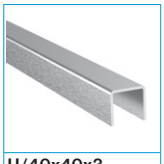
U/40x40x3-..
A/U40x40x3-..
AL/U40x40x3-..


H/37...


H/10B...

Quality	Finish	art.	max L	TS-CS8-ECO
Fe	Zn	TS-S3-15	15000	2x

L	LS	min E	max S2, S3 (kg)
3000	1380	350	200
4000	1710		
5000	2040		
6000	2380		
7000	2710		
8000	3040		
9000	3630	600	
10000	3960		
11000	4290		
12000	4630		
13000	4960		
14000	5290		
15000	5630		

4 ZÁVESNÉ BRÁNY
HANGING GATES

PROFILY, VOZÍKY
TRACKS, CARRIAGES

PRÍSLUŠENSTVO
ACCESSORIES

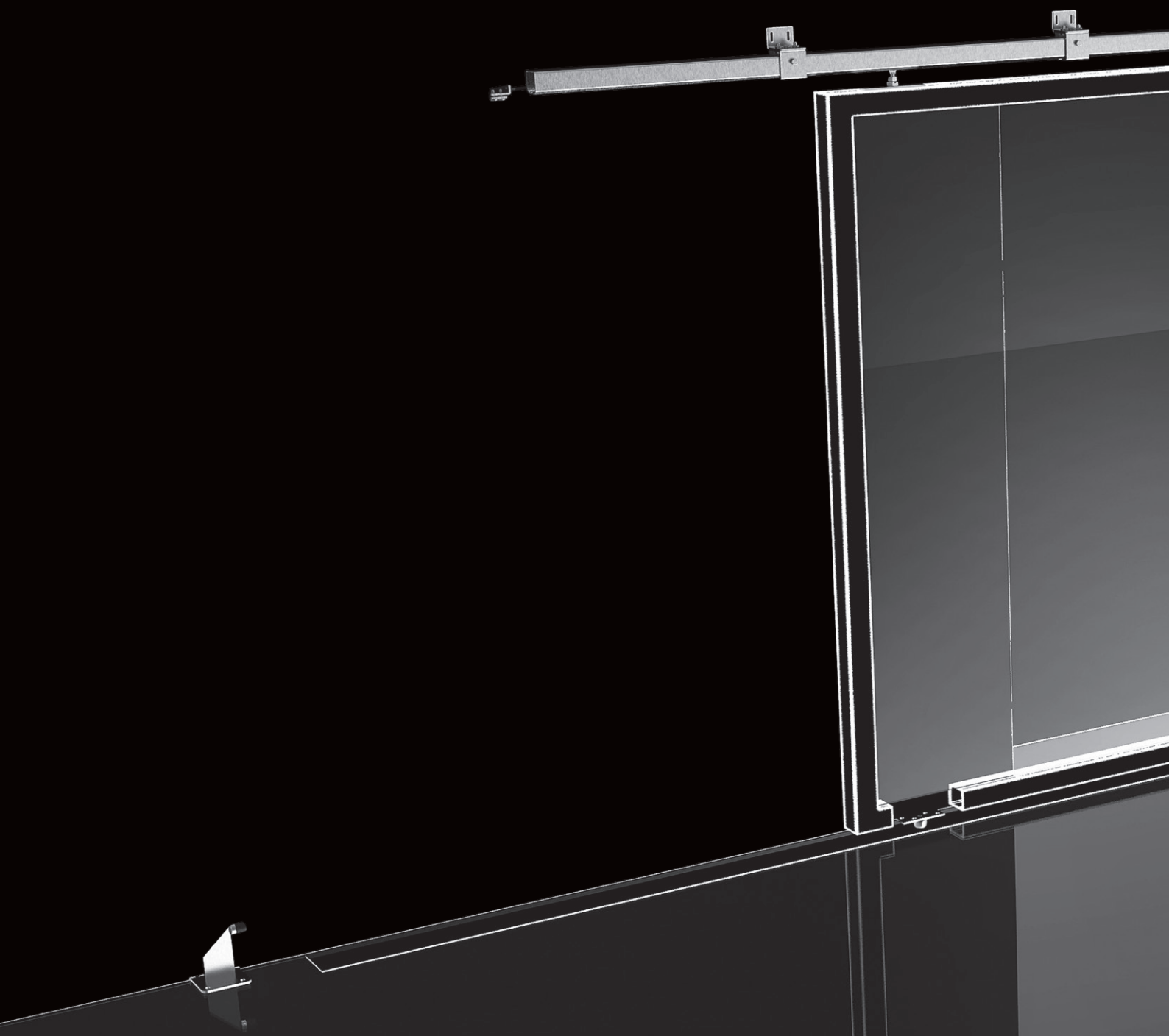

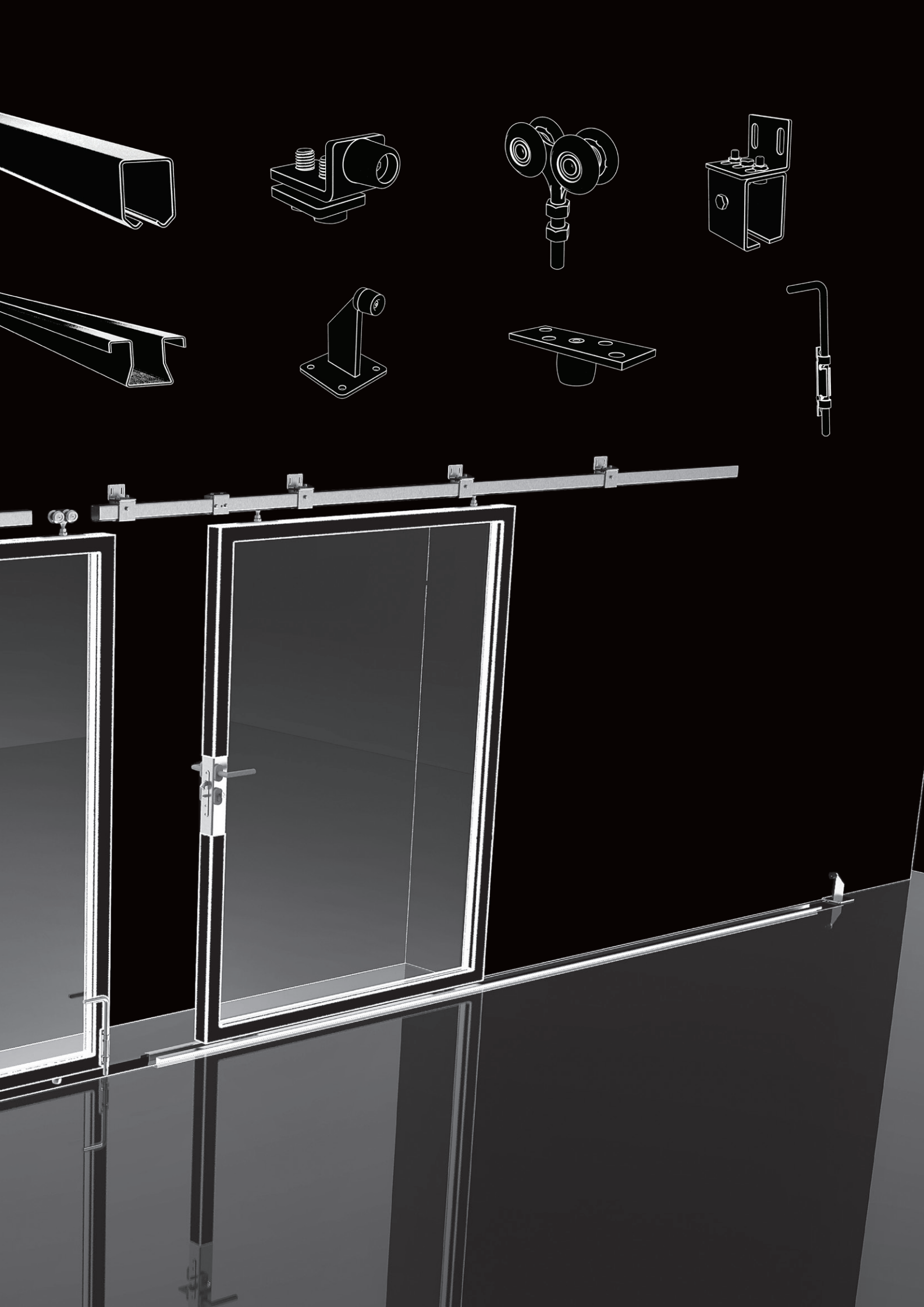

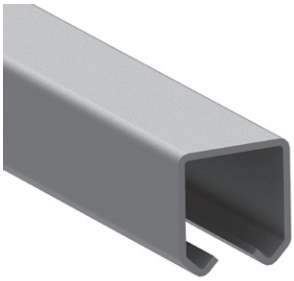

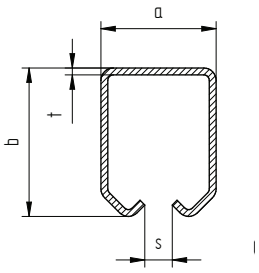

Quality	Finish	art.	a	b	t	s	L
Fe	raw	H/18-33x34-Fe-3000	33	34	2	10	3000
		H/18-33x34-Fe-6000					6000
	Zn	H/18-33x34-Zn-3000					3000
		H/18-33x34-Zn-6000					6000
	raw	H/18-42x54-Fe-3000	42	54	2,5	12	3000
		H/18-42x54-Fe-6000					6000
	Zn	H/18-42x54-Zn-3000					3000
		H/18-42x54-Zn-6000					6000
AISI304	raw	H8/18-42x54-3000					3000
		H8/18-42x54-6000					6000
Fe	Zn	H/18-57x67-Zn-3000	57	67	3	16	3000
		H/18-57x67-Zn-6000					6000

top

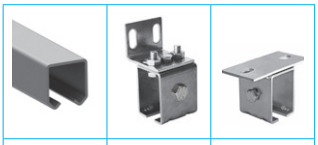

H/18... H8/18...	H/47B... H8/47B...	H/47V... H8/47V...
L3000	5x	
L6000	9x	

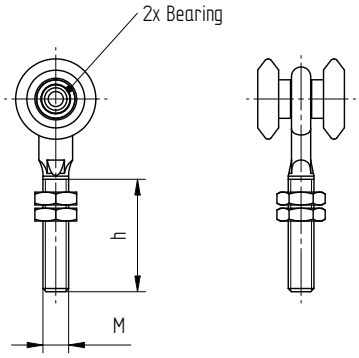

Quality	Finish	art.	M	h	Gmax/2pcs (kg)	⊓
Fe	Zn	H/07-33x34	8	35	60	33x34
		H/07-42x54	12	72	200	42x54
		H/07-57x67	20	85	400	57x67

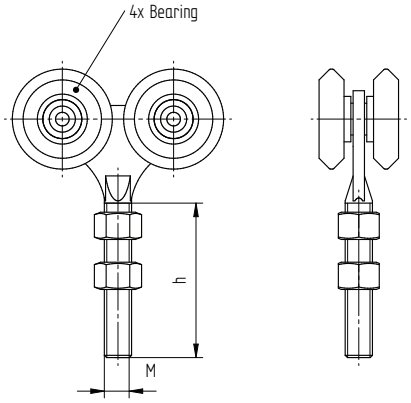

Quality	Finish	art.	M	h	Gmax/2pcs (kg)	⊓
Fe	Zn	H/08-33x34	8	35	90	33x34
		H/08-33x34-NYLON			60	
		H/08-42x54	12	68	400	42x54
		H/08-42x54-NYLON			200	
AISI304	raw	H8/08-42x54		58	500	
Fe	Zn	H/08-57x67	20	85	700	57x67
		H/08-57x67-NYLON			350	

top

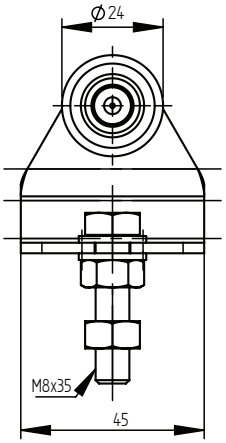

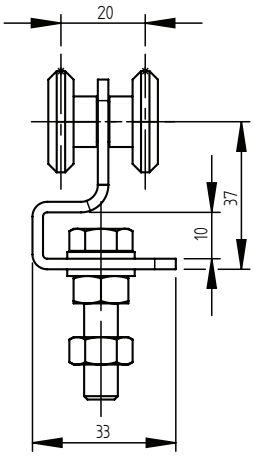

Quality	Finish	art.	Gmax/2pcs (kg)	
Fe	Zn	H/26-33x34	60	33x34

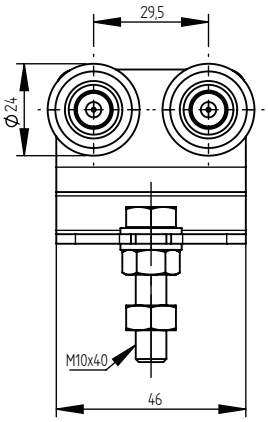

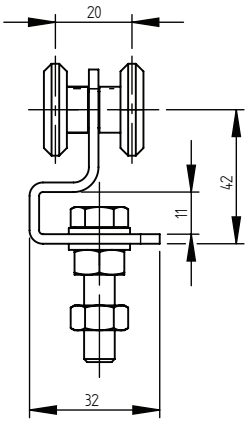

Quality	Finish	art.	Gmax/2pcs (kg)	
Fe	Zn	H/27-33x34	80	33x34
		H/27-33x34-NYLON	40	

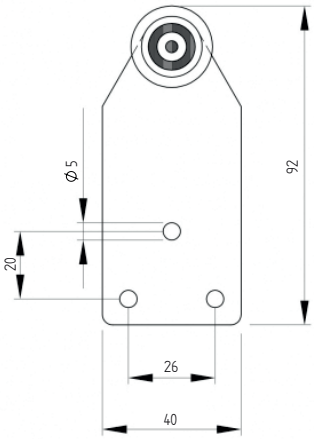

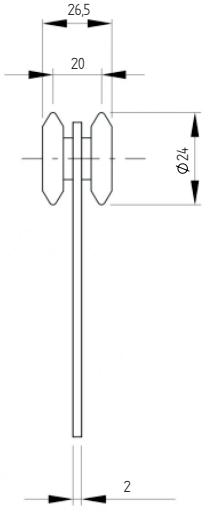

Quality	Finish	art.	Gmax/2pcs (kg)	
Fe	Zn	H/28-33x34	60	33x34

new

PROFILES, CARRIAGES

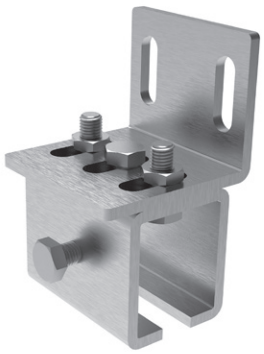

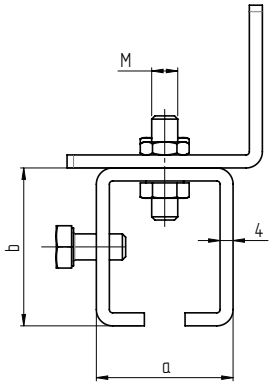

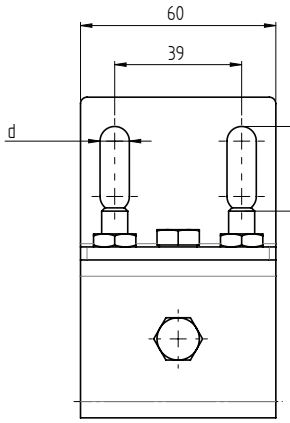

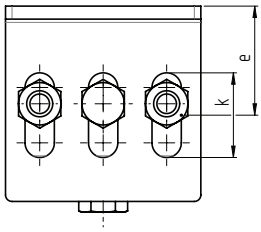

Quality	Finish	art.	a	b	d	k	e	M		
Fe	Zn	H/47B-33x34	42,5	48,5	9	26	35	8	33x34	5x/L3000 9x/L6000
		H/47B-42x54	53	72	11	30	37	10	42x54	
AISI304	raw	H8/47B-42x54								
Fe	Zn	H/47B-57x67	66	86			42		57x67	

top

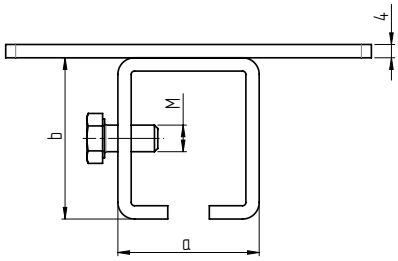

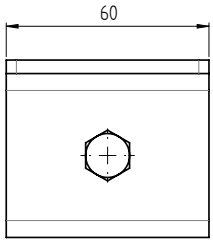

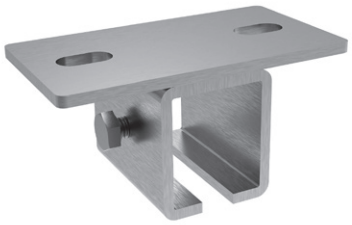

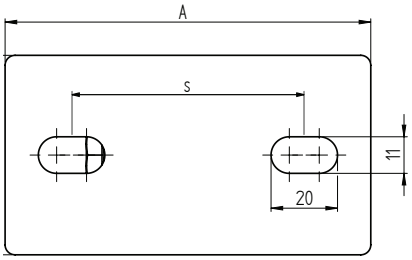

Quality	Finish	art.	A	a	b	s	M		
Fe	Zn	H/47V-33x34	110	42,5	48,5	70	8	33x34	5x/L3000 9x/L6000
		H/47V-42x54	120	53	72	80	10	42x54	
AISI304	raw	H8/47V-42x54							
Fe	Zn	H/47V-57x67	130	66	86	94		57x67	

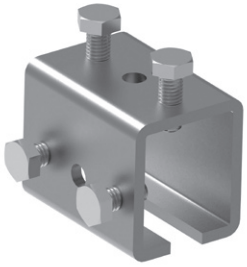

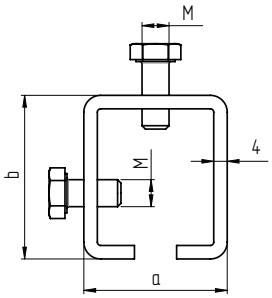

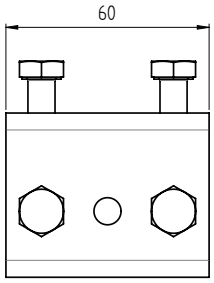

Quality	Finish	art.	a	b	M	
Fe	Zn	H/23-33x34	42,5	48,5	8	33x34
		H/23-42x54	52,5	72	10	42x54
		H/23-57x67	66	86		57x67

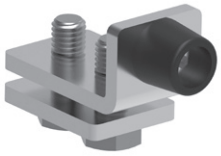

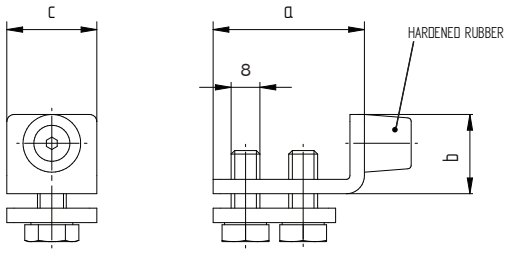

Quality	Finish	art.	a	b	c	▢
Fe	Zn	H/22	42	22	25	33x34 42x54
		H/22-57x67	59	40	40	57x67

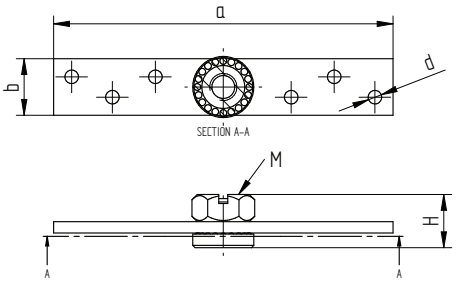

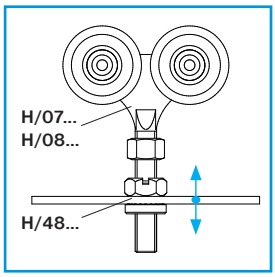

Quality	Finish	art.	M	a	b	d	H	▢
Fe	Zn	H/48-M8	8	100	20	4x6	20	33x34
		H/48-M12	12	150	25	6x6	24	42x54
		H/48-M20	20	150	40	4x10	32	57x67

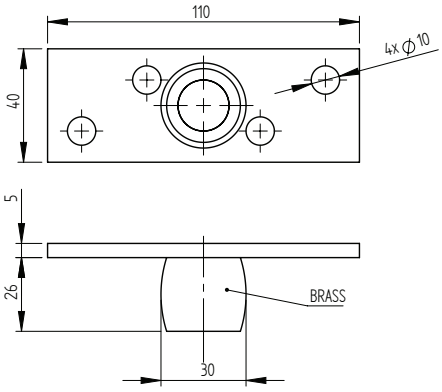

Quality	Finish	art.
Fe + Brass	Zn	H/60

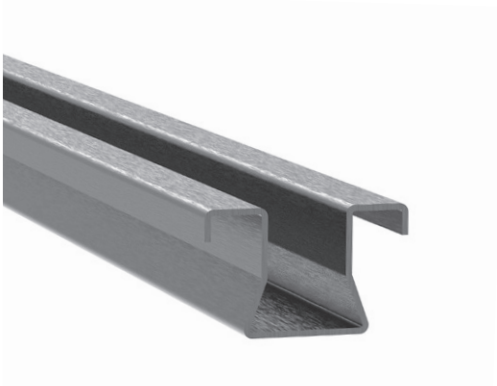

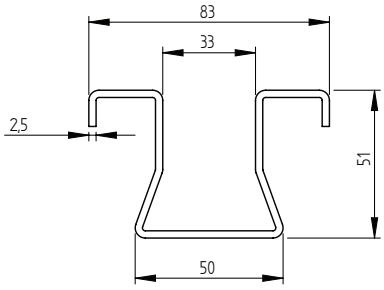

Quality	Finish	art.	L
Fe	Zn	H/59-Zn-3000	3000
		H/59-Zn-6000	6000

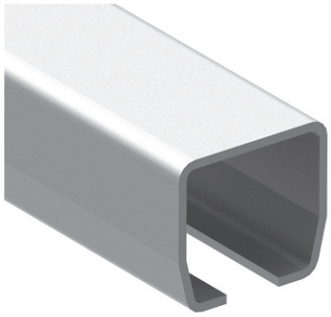

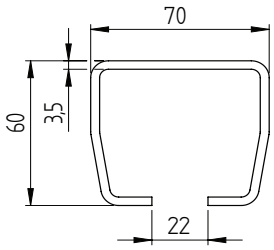

Quality	Finish	art.	L
Fe	raw	H/02-70x60-Fe-3000	3000
		H/02-70x60-Fe-6000	6000
	Zn	H/02-70x60-Zn-3000	3000
		H/02-70x60-Zn-6000	6000

H/08-70x60B

H/08-70x60S

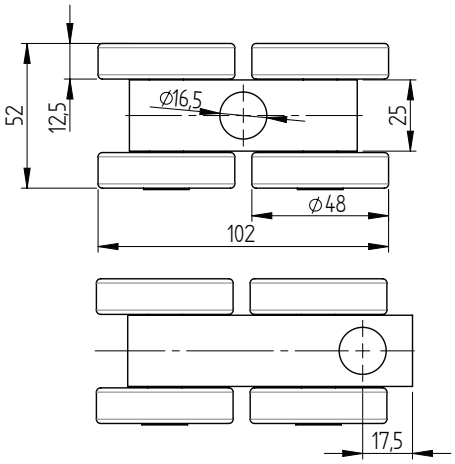

Quality	Finish	art.	Gmax	
Fe	Zn	H/08-70x60B	400	70x60
		H/08-70x60S		

H/48-M16

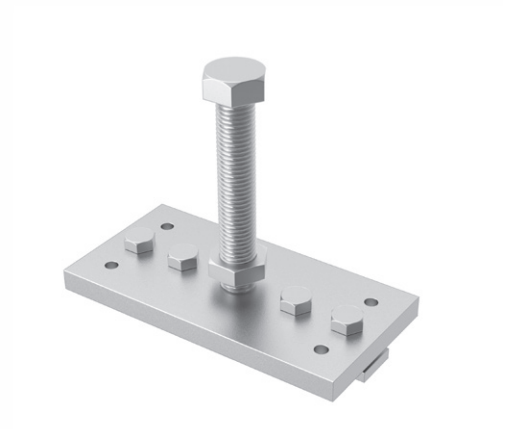

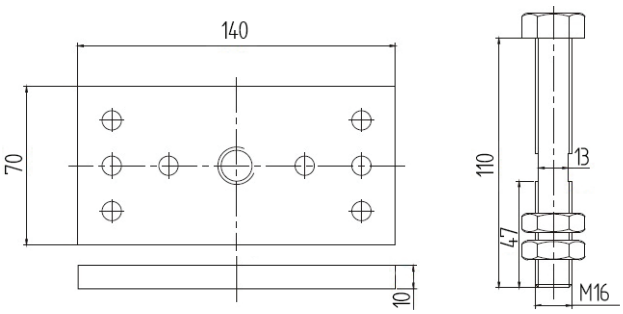

Quality	Finish	art.
Fe	Zn	H/48-M16

ACCESSORIES

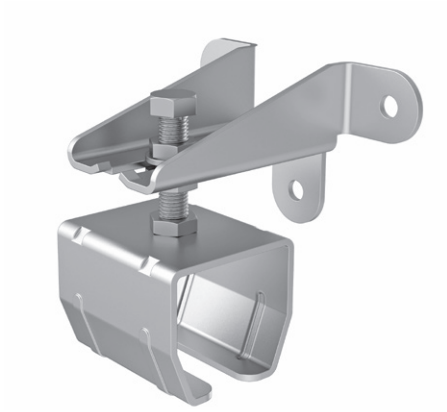

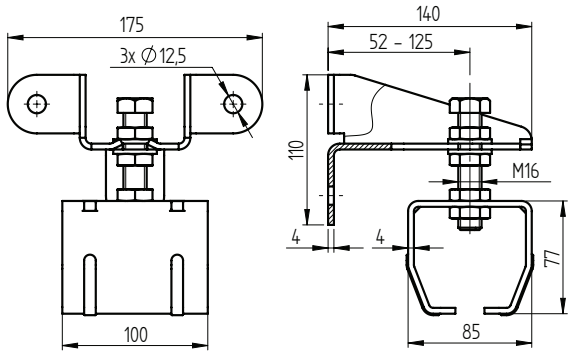

Quality	Finish	art.
Fe	Zn	H/47B-70x60

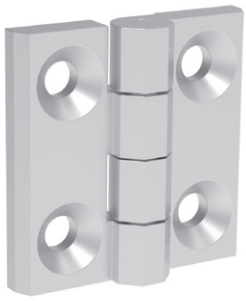

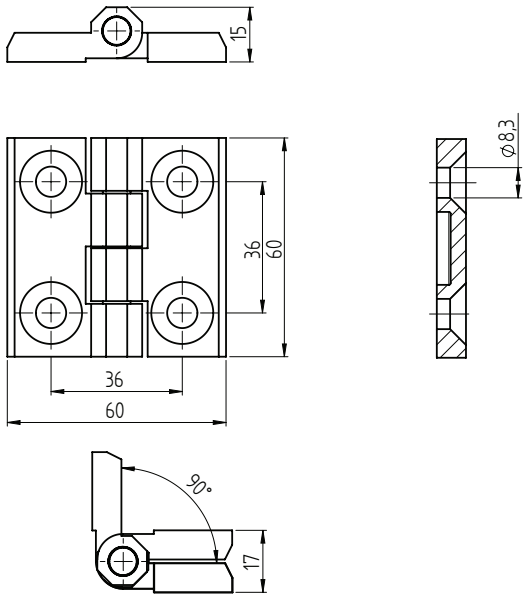

Quality	Finish	art.	Ø	Gmax/2pcs (kg)
AISI316	raw	D16/77-60	Flat	50

ACCESSORIES

5 KRÍDLOVÉ BRÁNY
SWING GATES

ZÁVESY FLEX
FLEX HINGES

ZÁVESY FLEX - ATYP
FLEX HINGES - ATYPICAL

ZÁVESY FIX
FIX HINGES

ZÁVESY PRE ALU BRANY
HINGES FOR ALU GATES

DORAZY A ZÁSTRČE
BATTENS & LATCHES

ZÁMKOVÉ SETY, KRABICE
LOCK SETS, BOXES

ZÁMKOVE DORAZY
SHRIKING BOXES

ZÁMKY
LOCKS

KOMPATIBILITA
COMPATIBILITY

KĽUČKY
HANDLES

ŠTÍTKY
LOCK COVER PLATES

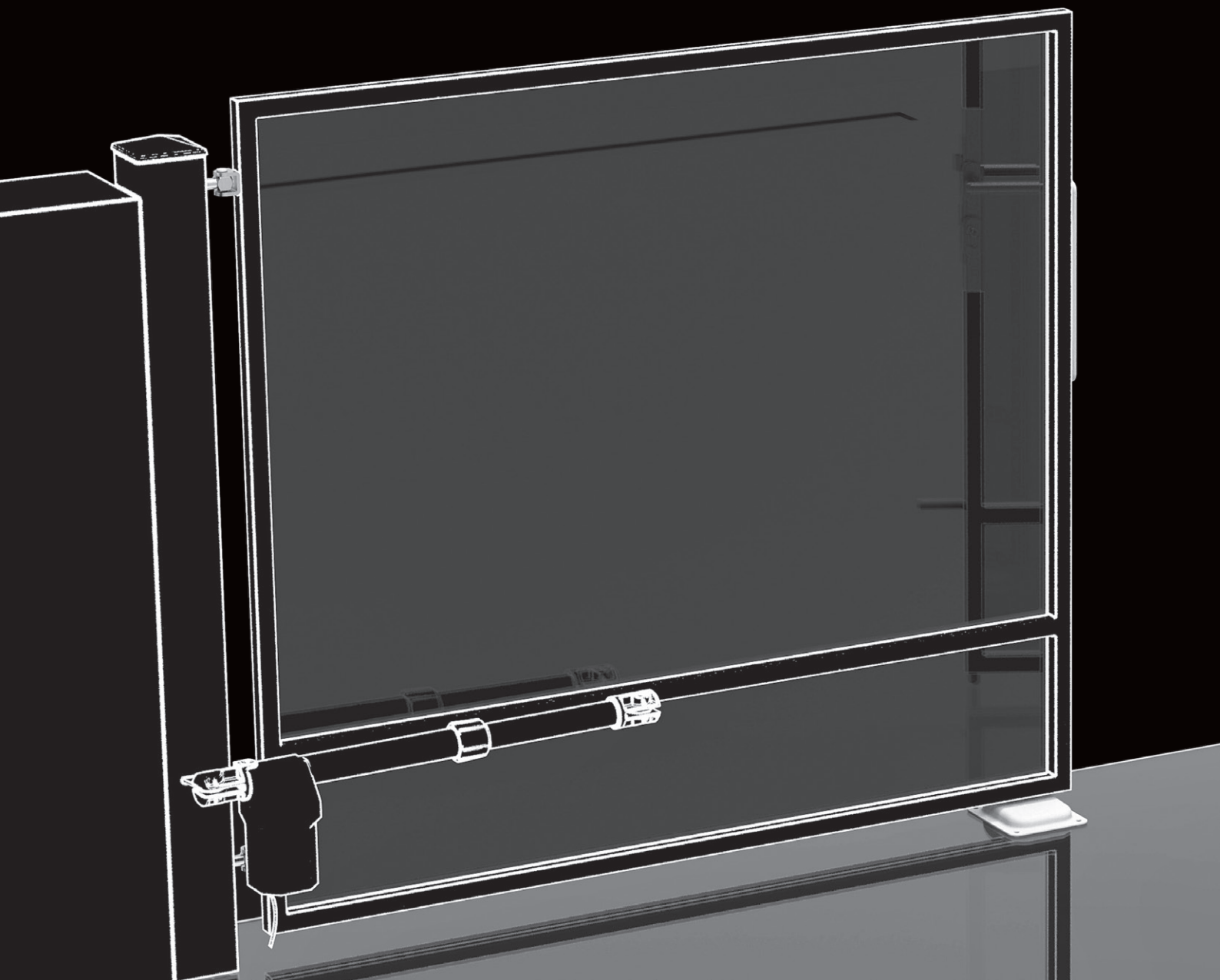

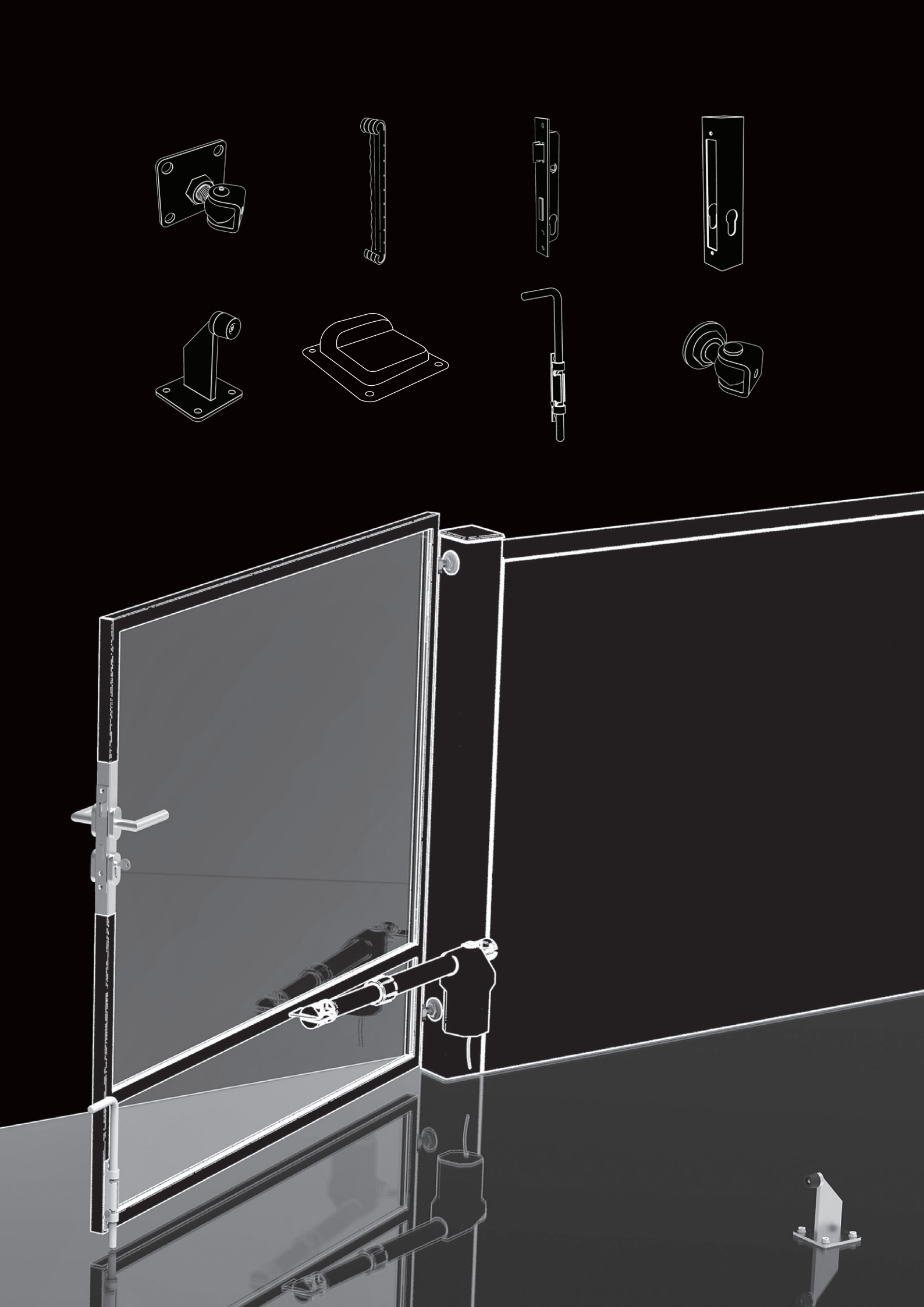

MODEL FLEX - SCREW/WELD

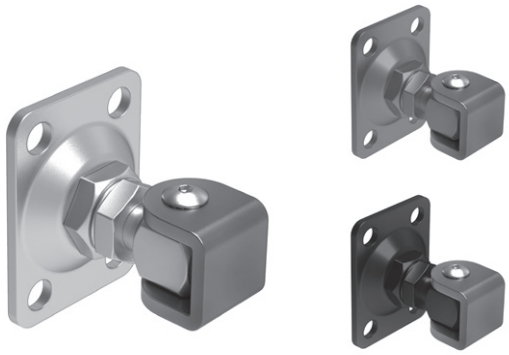

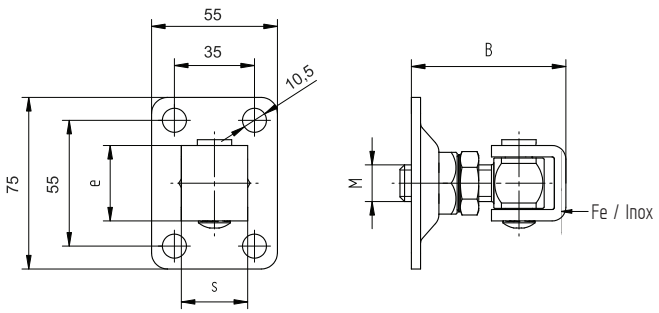

Quality	Finish	art.	Color	M	B	e	s	Gmax/2pcs (kg)	
Fe	Zn	D4/53-M12-K	-	12	56-63	27	20	40	new
AISI304	raw	D8/53-M12-K							
Fe	Zn	D4/53A-M16-K		16	64-75	33	29	60	top
		D4/53A-M16-K-R9005	RAL 9005						new
		D4/53A-M16-K-R7016	RAL 7016						new


Q5/09-Quick-Fix QF5

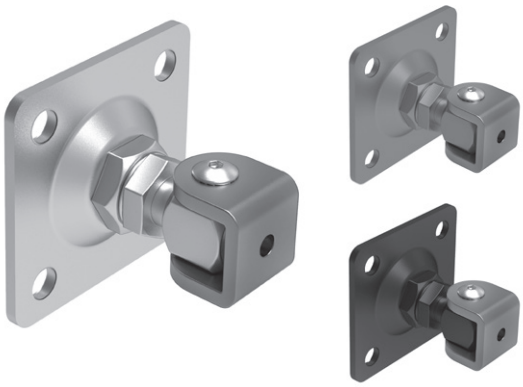

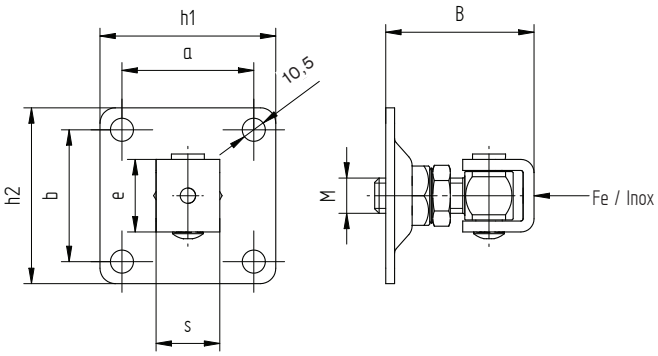

Quality	Finish	art.	Color	M	B	h1xh2	a	b	e	s	Gmax/2pcs (kg)	
Fe	Zn	D4/53-M16-K	-	16	64-75	80x80	55	55	33	29	60	top
		D4/53-M16-K-R9005	RAL 9005									new
		D4/53-M16-K-R7016	RAL 7016									new
AISI304	raw	D8/53-M16-K	-		64-80				36	30		
Fe	Zn	D4/53-M18-K		18	64-85	90x90	68	68			80	
		D4/53-M20-K		20	69-90	100x100	74	74	43		100	
AISI304	raw	D8/53-M20-K					75	75	35			
Fe	Zn	D4/53-M24-K		24	79-115	120x120	90	90	50	35	150	


Q5/09-Quick-Fix QF5

HINGES

MODEL FLEX - SCREW/SCREW

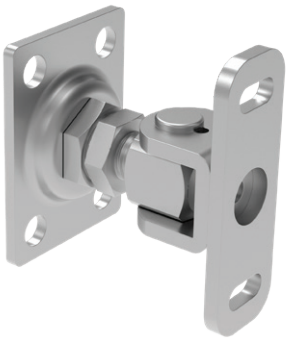

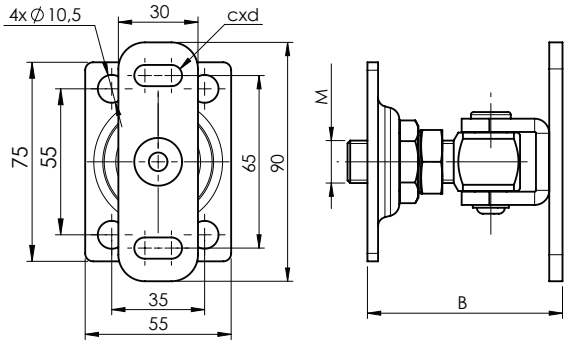

Quality	Finish	art.	M	B	cxd	Gmax/2pcs (kg)	
AISI304	raw	D8/53F-M12-K	12	50-70	6x16	40	new
		D8/53AF-M16-K	16	70-85	8x18	60	new


Q5/09-Quick-Fix QF5

MODEL FLEX - SCREW/SCREW

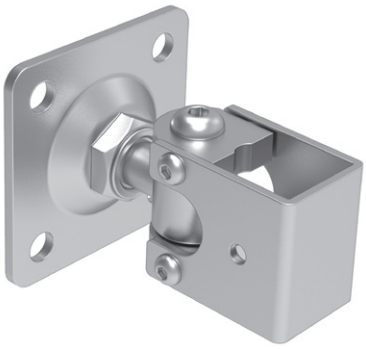

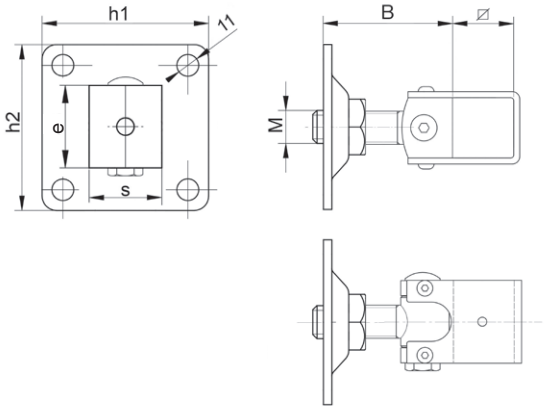

Quality	Finish	art.	⌀	M	B	h1xh2	e	s	Gmax/2pcs (kg)	
Fe	Zn	D4/53-M16-30x30	30x30	16	55-75	80x80	46,5	38	200	new
		D4/53-M16-50x30	50x30							
		D4/53-M20-40x40	40x40	20	65-85	100x100	51,5	48	300	new
		D4/53-M20-60x40	60x40							

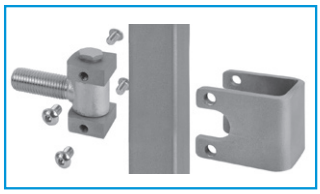

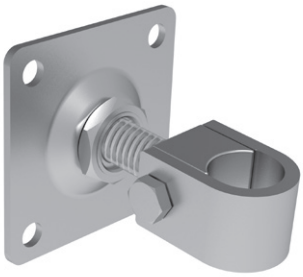

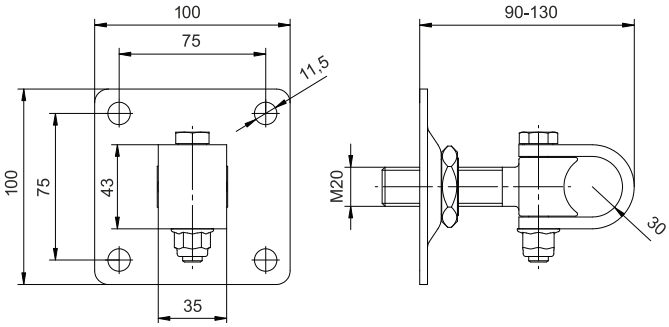

Quality	Finish	art.	Gmax/2pcs (kg)
Fe	Zn	D4/58-M20	100

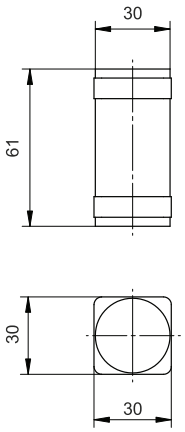

Quality	Finish	art.	Gmax/2pcs (kg)
Fe	Zn	D4/45T-30	100

MODEL FLEX - SCREW

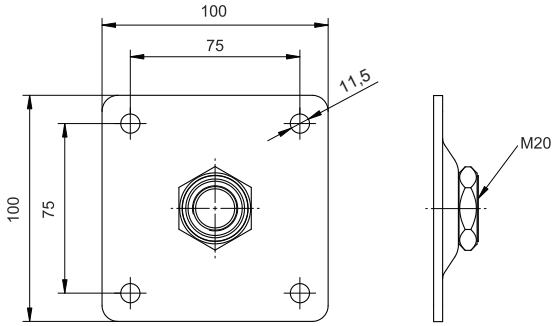

Quality	Finish	art.
Fe	Zn	D4/26A-M20

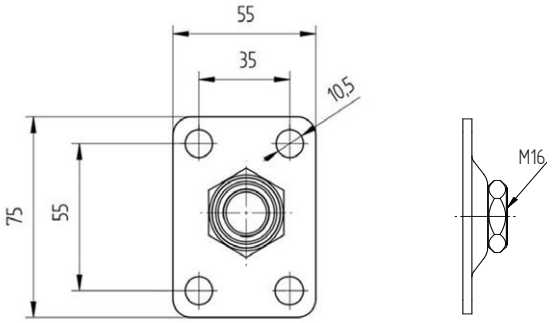

Quality	Finish	art.
Fe	Zn	D4/26B-M16

new

HINGES

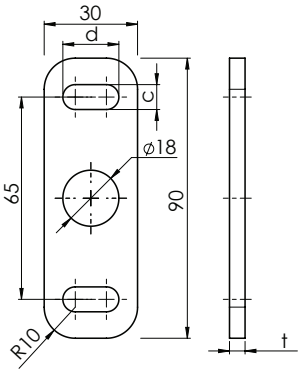

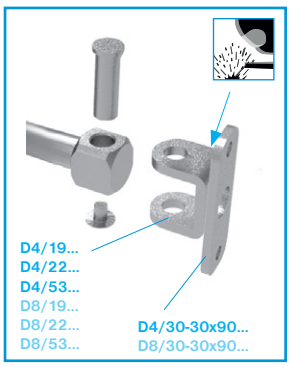

Quality	Finish	art.	c	d	t
Fe	raw	D4/30-30x90x3	6	16	3
AISI304		D8/30-30x90x3			
Fe		D4/30-30x90x5	8	18	5
AISI304		D8/30-30x90x5			

new

MODEL FLEX - WELD/WELD

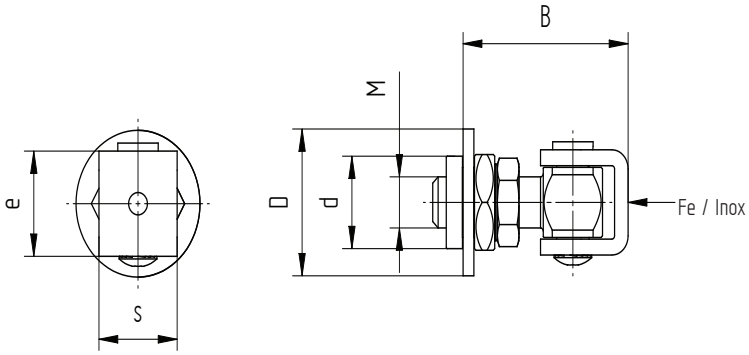

Quality	Finish	art.	M	B	d	D	e	s	Gmax/2pcs (kg)
Fe	Zn	D4/22-M12-K	12	45-53	22	40	27	20	40
AISI304	raw	D8/22-M12-K							
Fe	Zn	D4/22-M16-K	16	54-65	29	46	33	29	60
AISI304	raw	D8/22-M16-K		54-75	30		35	30	
Fe	Zn	D4/22-M18-K	18	64-75	35	52	36,5		80
		D4/22-M20-K	20	64-80			42		100
AISI304	raw	D8/22-M20-K		59-80			35		

new
top

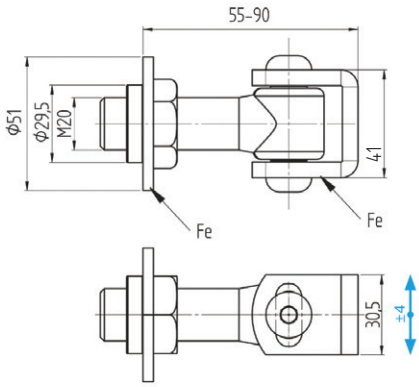

Quality	Finish	art.	Gmax/2pcs (kg)
Fe	Zn	D4/22-M20R	100

MODEL FLEX - WELD/SCREW

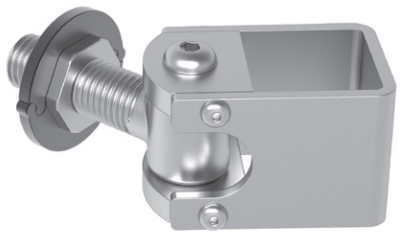

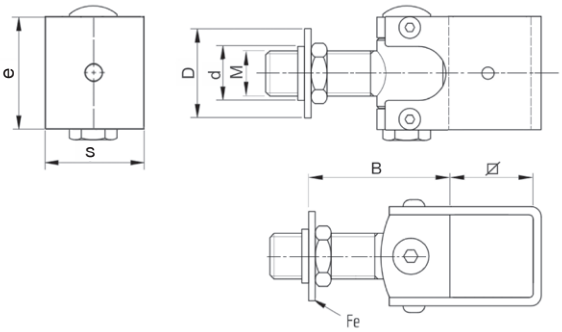

Quality	Finish	art.	Ø	M	B	d	D	e	s	Gmax/2pcs (kg)
Fe	Zn	D4/22-M16-30x30	30x30	16	55-75	25	52	46,5	38	200
		D4/22-M16-50x30	50x30							
		D4/22-M20-40x40	40x40	20	65-85	29	60	51,5	48	300
		D4/22-M20-60x40	60x40							

new
new

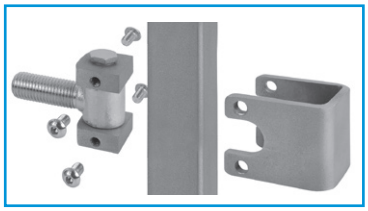

HINGES

MODEL FLEX - WELD/WELD

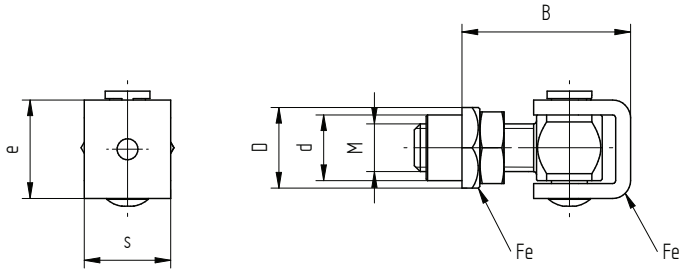

Quality	Finish	art.	M	B	d	D	e	s	Gmax/2pcs (kg)
Fe	Zn	D4/19-M12-K	12	44-55	18	22	26	20	40
		D4/19-M16-K	16	49-60	22	25	33	29	60
		D4/19-M18-K	18	54-70	23	28	36	30	80
		D4/19-M20-K	20	59-70	26	30	43	30	100

top

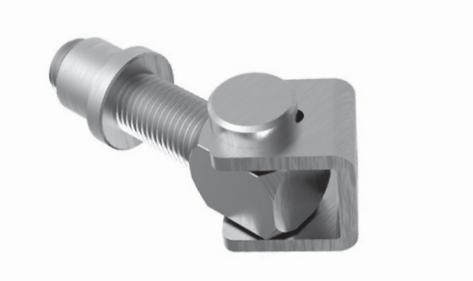

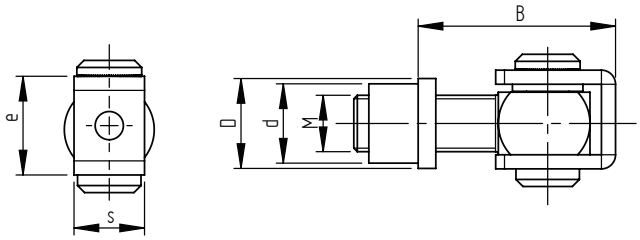

Quality	Finish	art.	M	B	d	D	e	s	Gmax/2pcs (kg)
AISI304	raw	D8/19-M12	12	35-60	18	22	24	16	40
		D8/19-M16	16	40-60	21	29	28	20	60
		D8/19-M20	20	50-70	25	31	37	29	100

MODEL FLEX - WELD/SCREW

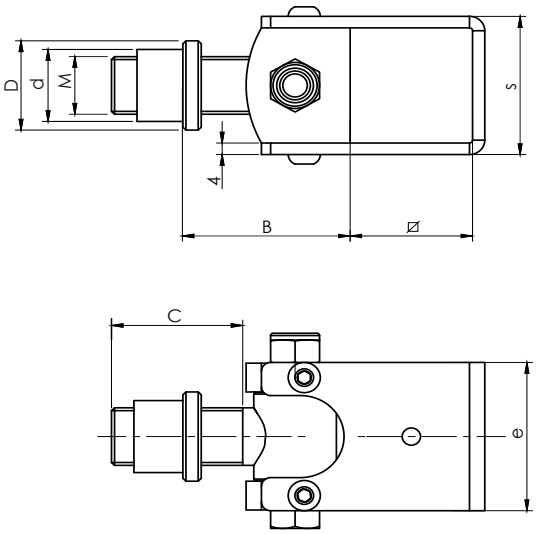

Quality	Finish	art.	M	Ø	B	C	D	d	e	s	Gmax/2pcs (kg)
Fe	Zn	D4/19-M16-30x30	16	30x30	45-60	38	29	22	46,5	38	200
		D4/19-M16-50x30		50x30							
		D4/19-M20-40x40	20	40x40	50-70	43	31	25	51,5	48	300
		D4/19-M20-60x40		60x40							

new
new
new
new

HINGES

MODEL FLEX - WELD/WELD

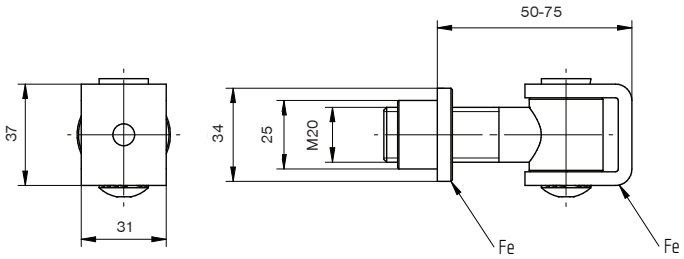

Quality	Finish	art.	Gmax/2pcs (kg)
Fe	Zn	D4/19-M20-N1	100

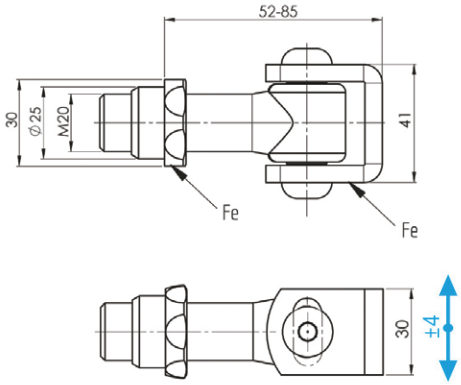

Quality	Finish	art.	Gmax/2pcs (kg)
Fe	Zn	D4/19-M20R	100

MODEL FLEX-ATYP - SCREW/WELD

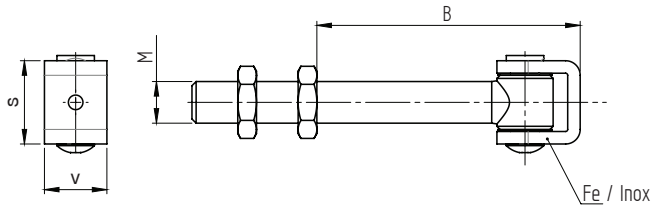

Quality	Finish	art.	M	B	s	v	Gmax/2pcs (kg)	
AISI304	raw	D8/67-M12	12	40-125	27	20	40	new
		D8/67-M16	16	54-167	40	30	60	new
Fe	Zn	D4/67-M16						
		D4/67-M20	20	62-160			100	

MODEL FLEX-ATYP - SCREW/SCREW

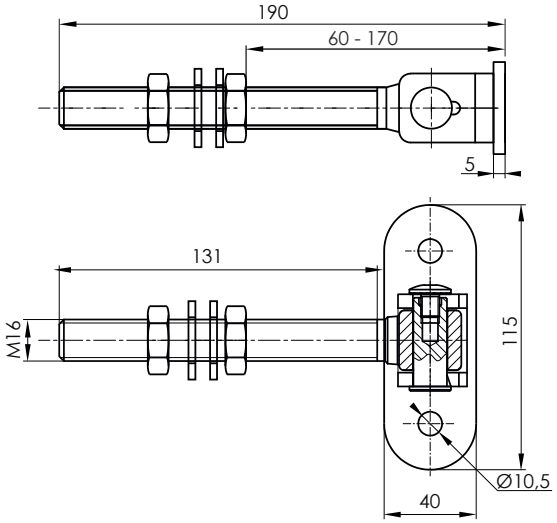

Quality	Finish	art.	M	Gmax/2pcs (kg)	
AISI304	raw	D8/67F-M16	16	60	new

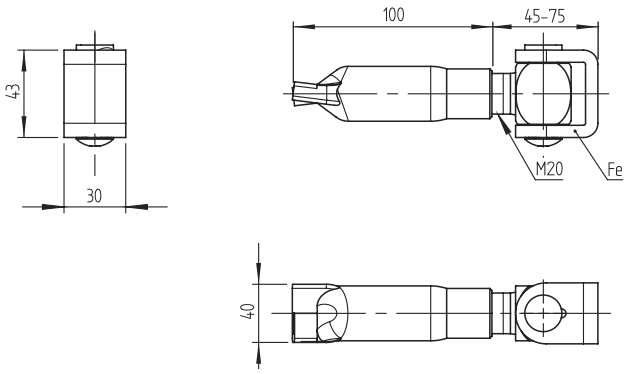

Quality	Finish	art.	Gmax/2pcs (kg)
Fe	Zn	D4/63-M20	100

HINGES

MODEL FLEX-ATYP - WELD/WELD

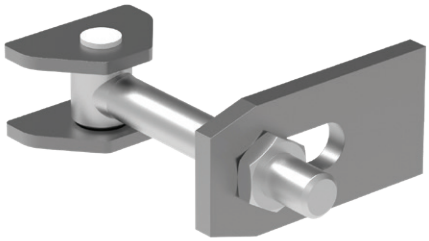

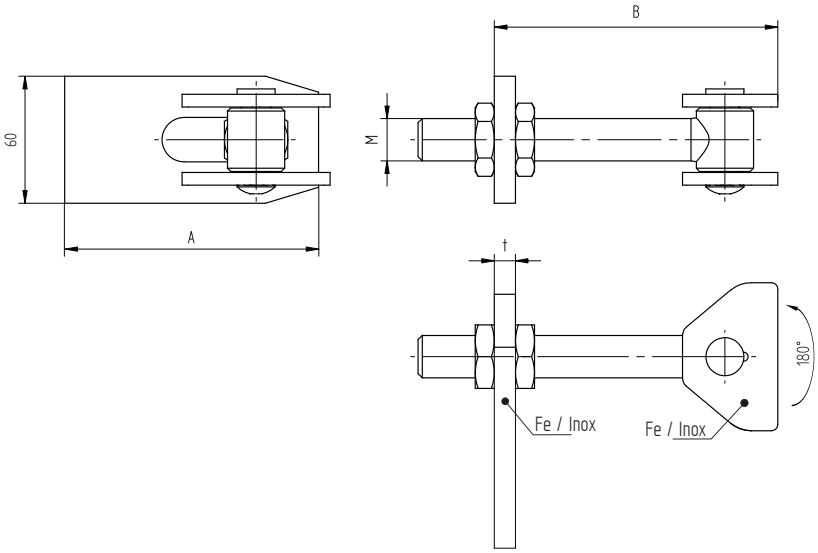

Quality	Finish	art.	M	A	B	t	Gmax/2pcs (kg)
Fe	Zn	D4/64-M16	16	100	60-170	8	60
AISI304	raw	D8/64-M16					
Fe	Zn	D4/64-M20	20	120+	65-160	10	100
AISI304	raw	D8/64-M20					

new

new

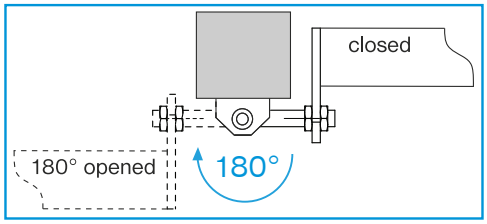

MODEL FLEX-ATYP - SCREW/SCREW

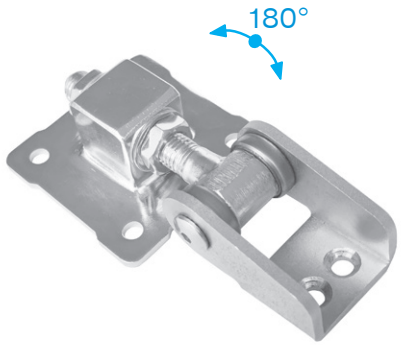

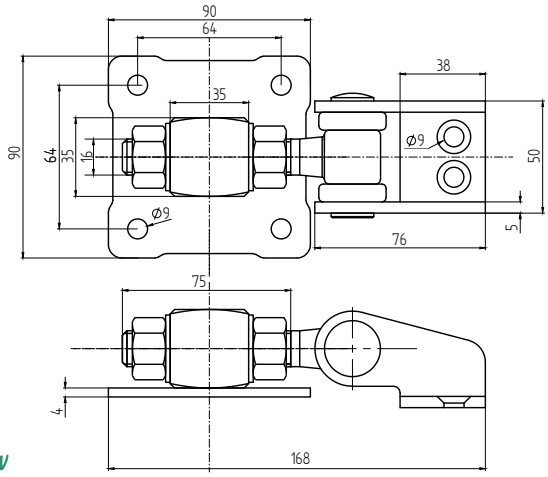

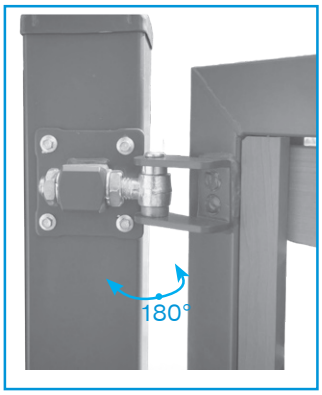

Quality	Finish	art.	Gmax (kg)
Fe	Zn	D4/75-M16	60

new

HINGES

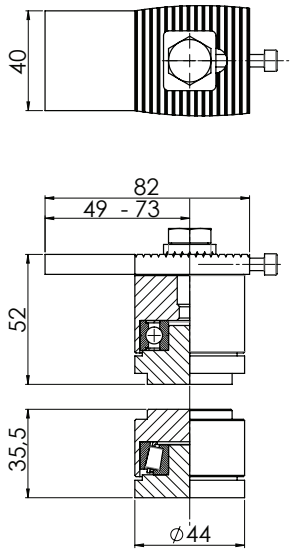

HEAVY DUTY

Quality	Finish	art.	Gmax (kg)
Fe	Zn	D4/52	250

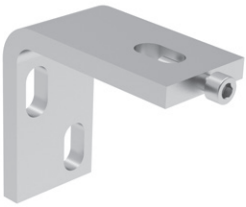

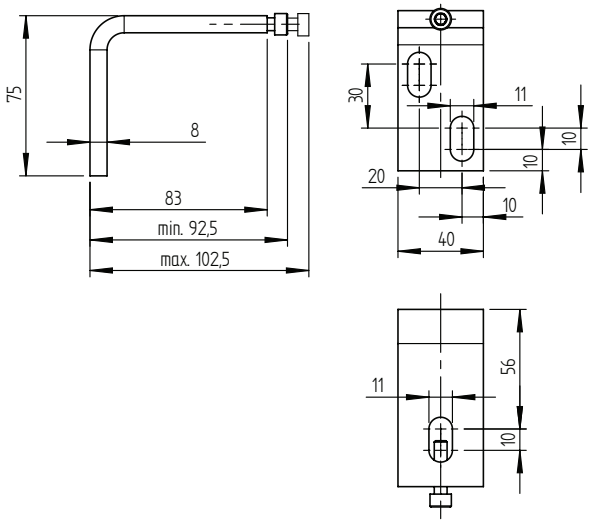

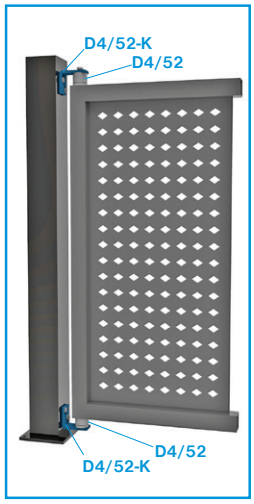

Quality	Finish	art.
Fe	Zn	D4/52-K

MODEL FLEX-ATYP - SCREW/WELD

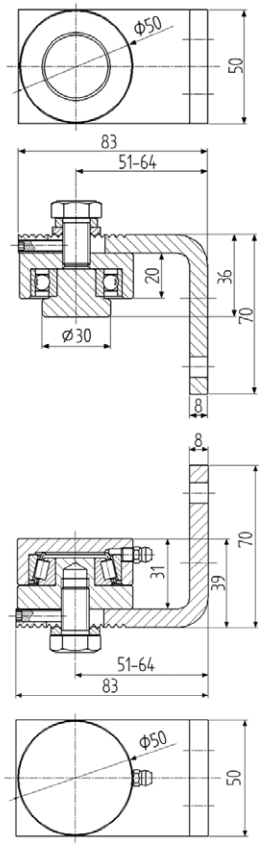

HEAVY DUTY

Quality	Finish	art.	Gmax (kg)
Fe	Zn	D4/52-D50	400

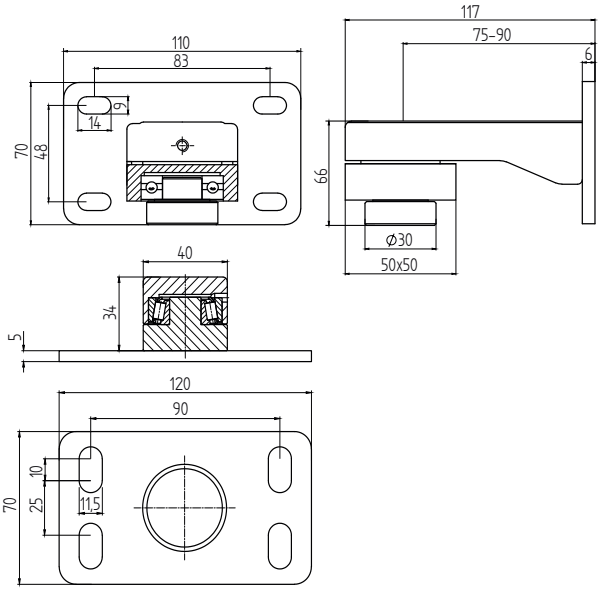

HEAVY DUTY

Quality	Finish	art.	Gmax (kg)
Fe	Zn	D4/52P-D40	300

new

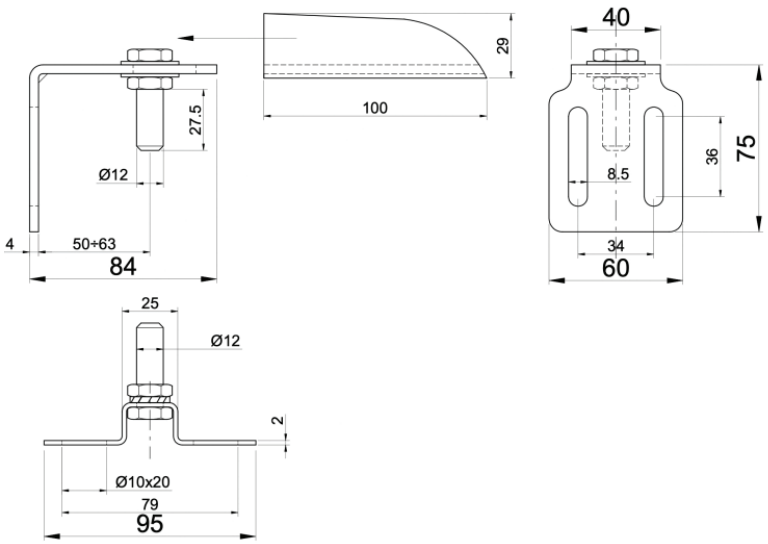

Quality	Finish	Color	art.	Gmax/2pcs (kg)
Fe	raw	grey	D4/83-40x40-GREY	80

new

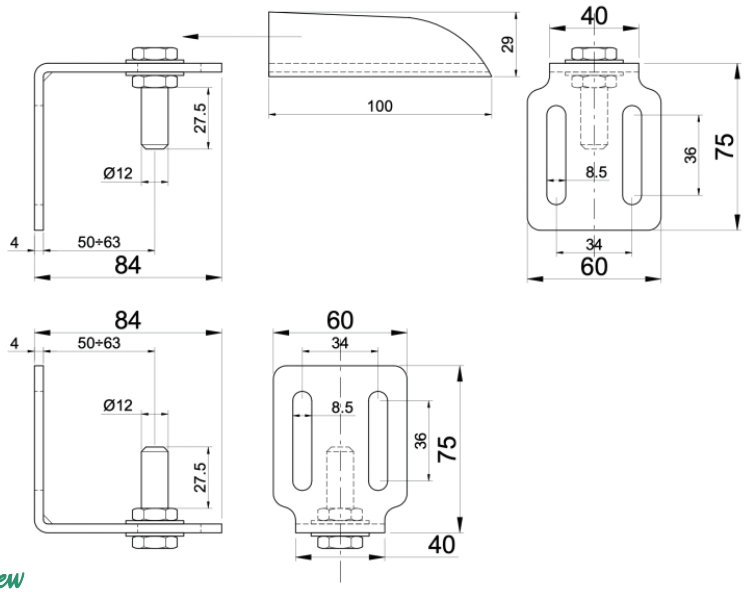

Quality	Finish	Color	art.	Gmax/2pcs (kg)
Fe	raw	grey	D4/84-40x40-GREY	80

new

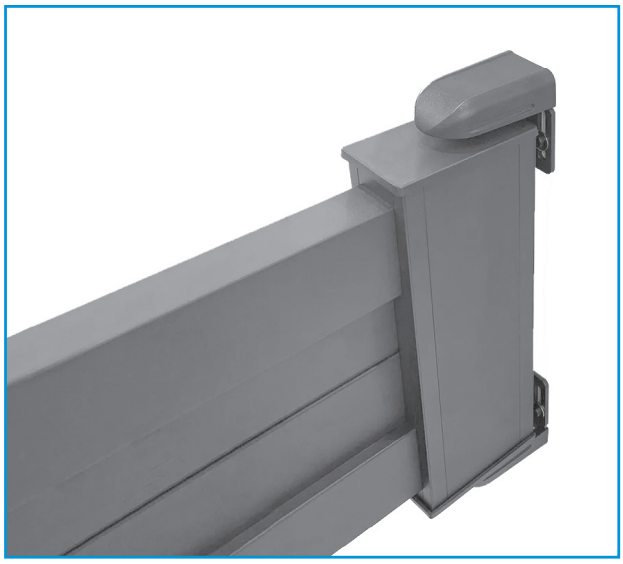

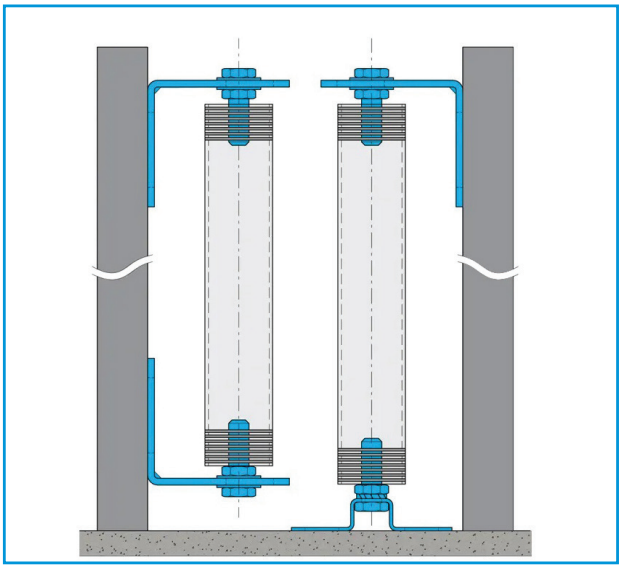

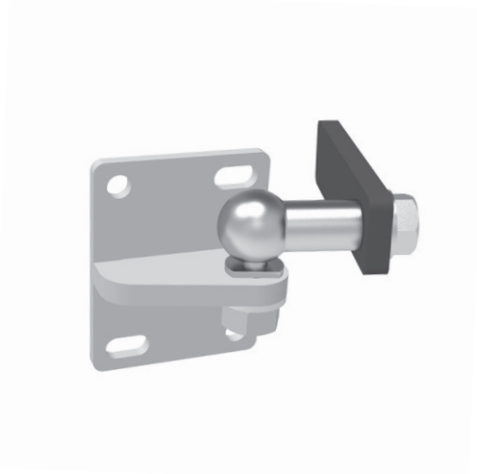

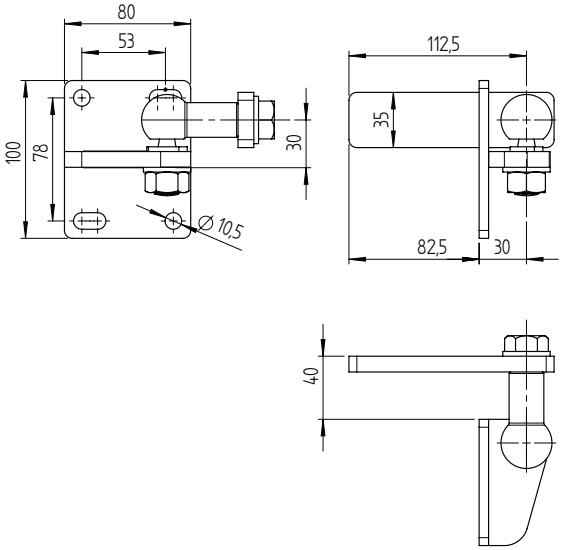

Quality	Finish	art.	Gmax (kg)
Fe	Zn	D4/78V	120

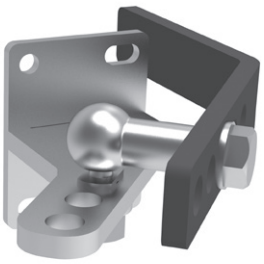

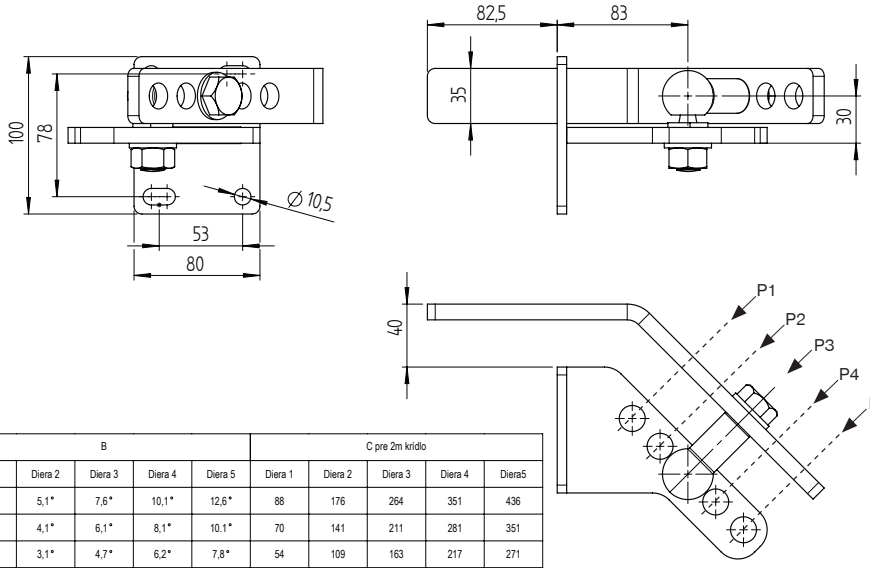

Quality	art.	Finish	Gmax (kg)
Fe	D4/78S	Zn	120

A	B					C pre 2m krídlo				
	Diera 1	Diera 2	Diera 3	Diera 4	Diera 5	Diera 1	Diera 2	Diera 3	Diera 4	Diera5
800	2,5°	5,1°	7,6°	10,1°	12,6°	88	176	264	351	436
1000	2,0°	4,1°	6,1°	8,1°	10.1°	70	141	211	281	351
1300	1,6°	3,1°	4,7°	6,2°	7,8°	54	109	163	217	271
1600	1,3°	2,5°	3,8°	5,1°	6,3°	44	88	132	176	220
1800	1,1°	2,3°	3,4°	4,5°	5,6°	39	78	118	157	195

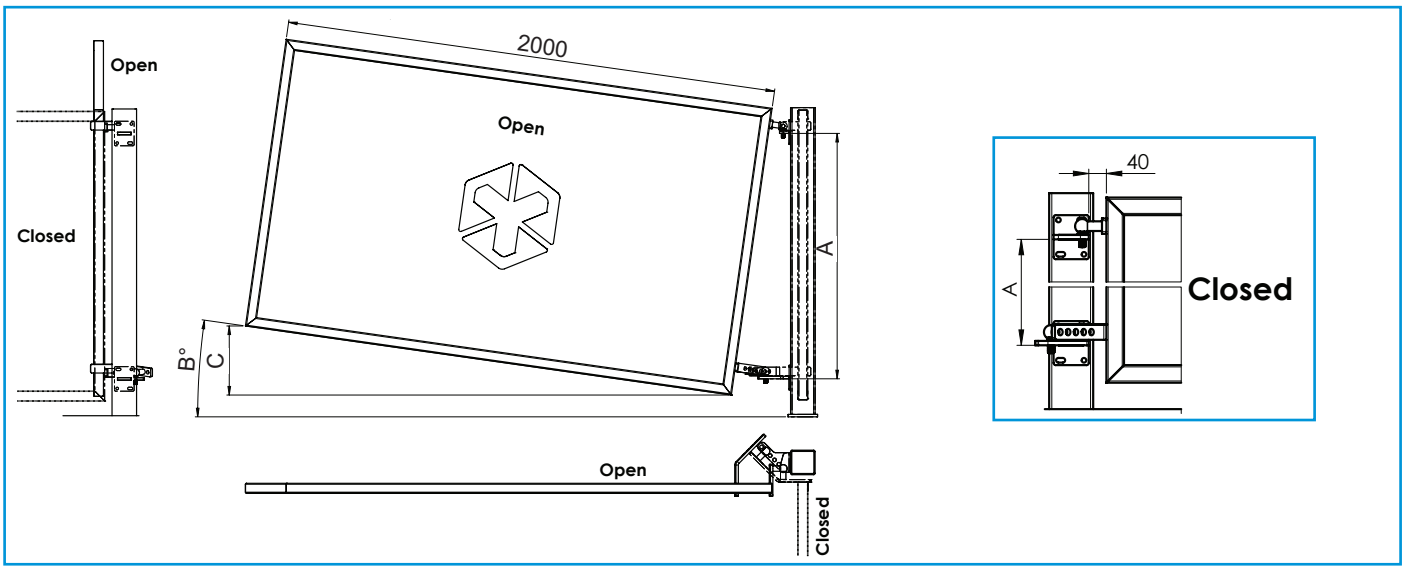

MODEL FIX-WELD

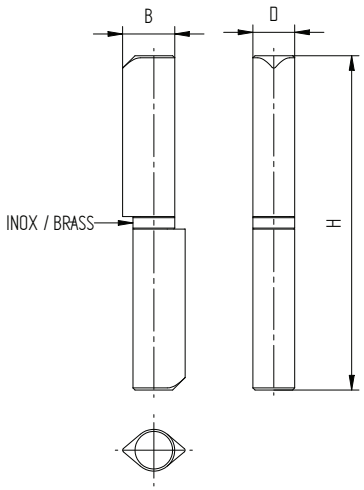

Quality	Finish	art.	D	H	B	Gmax/2pcs (kg)
Fe	raw	D4/11-40	10	40	12	20
		D4/11-60		60	12	
AISI304		D8/11-60				
Fe		D4/11-80	12	80	14	40
		D4/11-100	14	100	16	50
AISI304		D8/11-100				
Fe		D4/11-120	16	120	19	60
AISI304		D8/11-120			20	
Fe		D4/11-140		140	19	

top

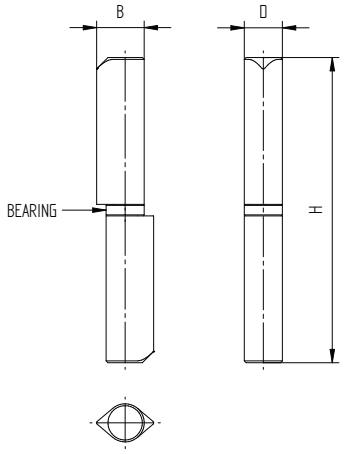

Quality	Finish	art.	D	H	B	Gmax/2pcs (kg)
Fe	raw	D4/11-160	20	160	22	80
		D4/11-180	20	180		100
		D4/11-200	22	200	25	

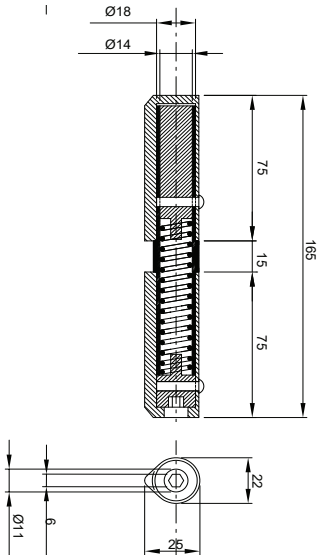

Quality	Finish	art.	Gmax/2pcs (kg)
Fe	raw	D4/11-165S	60
AISI304		D8/11-165S	

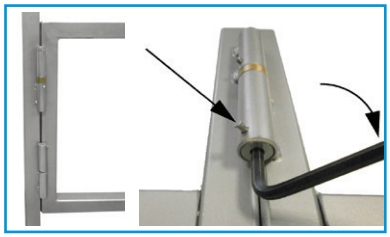

MODEL **FIX-WELD**

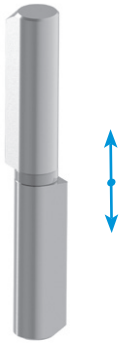

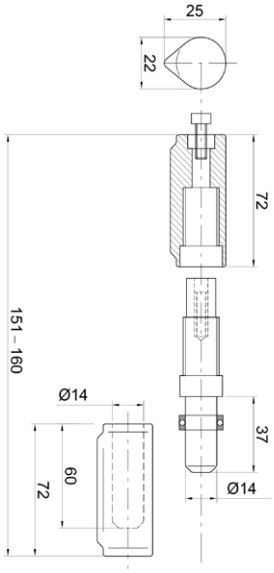

Quality	Finish	art.	Gmax/2pcs (kg)
Fe	raw	D4/11-150R	100

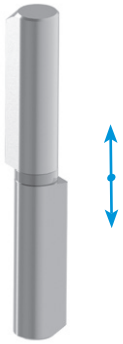

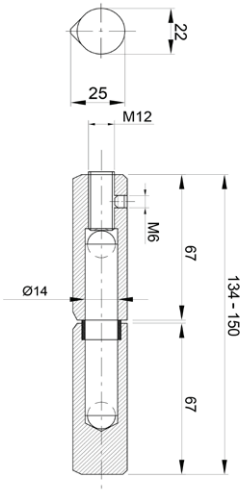

Quality	Finish	art.	Gmax/2pcs (kg)
Fe	raw	D4/11-150RD	100

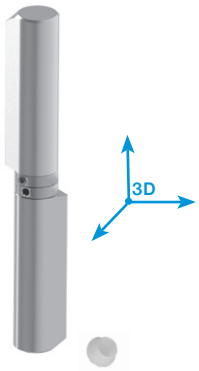

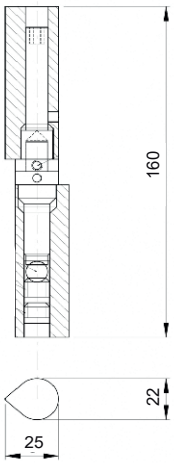

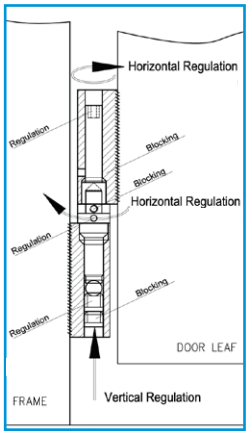

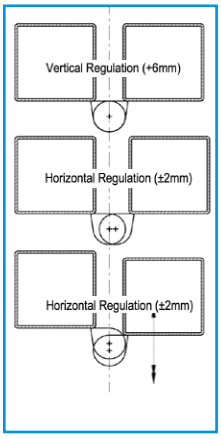

Quality	Finish	art.	Gmax/2pcs (kg)
Fe	raw	D4/11-160-3D	160

new

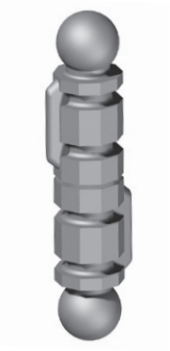

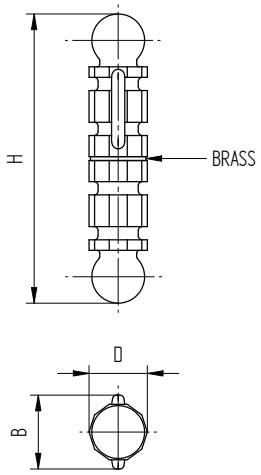

Quality	Finish	art.	D	H	B	Gmax/2pcs (kg)
Fe	raw	D4/41-21	21	110	28	60
		D4/41-25	25	130	35	80
		D4/41-30	30	155	45	100

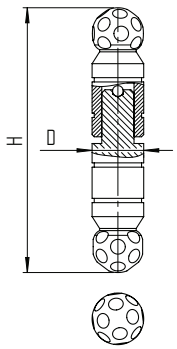

Quality	Finish	art.	D	H	Gmax/2pcs (kg)
Fe	raw	D4/47-100	20	105	60
		D4/47-122	24	125	80
		D4/47-146	30	142	100
		D4/47-195		195	120

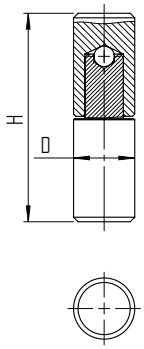

Quality	Finish	art.	D	H	Gmax/2pcs (kg)
Fe	raw	D4/60-70	20	70	80
		D4/60-90	27	90	100

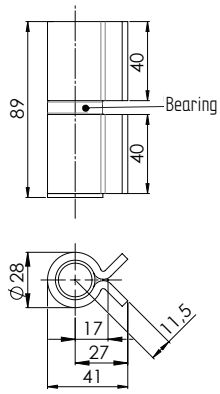

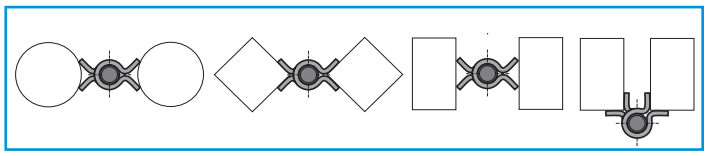

Quality	Finish	art.	Gmax/2pcs (kg)
Fe	raw	D4/13L	80

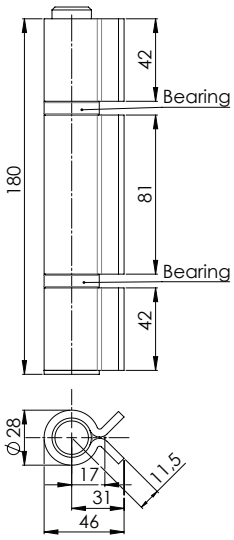

Quality	Finish	art.	Gmax/2pcs (kg)
Fe	raw	D4/14L	120

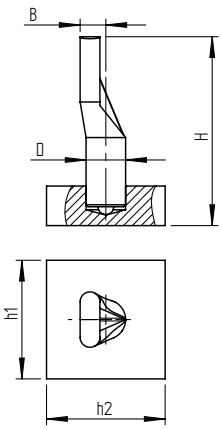

Quality	Finish	art.	B	D	H	h1xh2	Gmax (kg)
Fe	Zn	D4/32-20	19	20	90	60x60	200
		D4/32-24	23	24	100	70x70	300

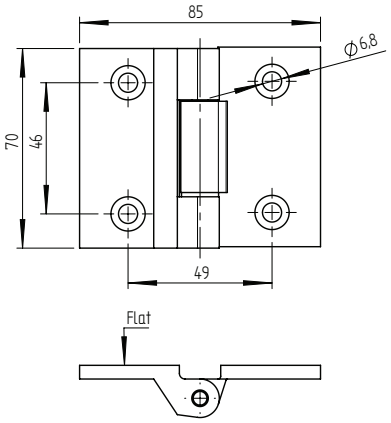

Quality	Finish	art.	Ø	Gmax/2pcs (kg)
AISI316	satin	D16/73-70-000	Flat	50

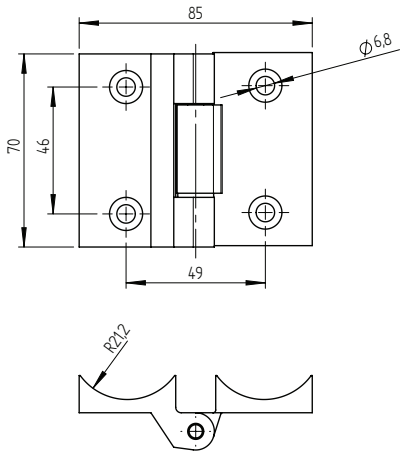

Quality	Finish	art.	Ø	Gmax/2pcs (kg)
AISI316	satin	D16/73-70-042	42,4	50

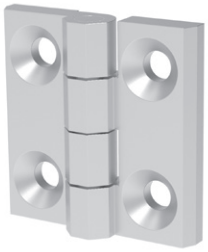

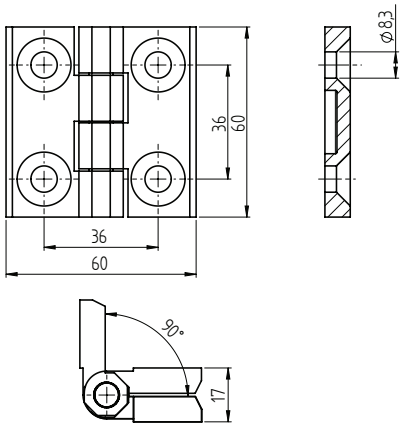

Quality	Finish	art.	Ø	Gmax/2pcs (kg)
AISI316	raw	D16/77-60	Flat	50

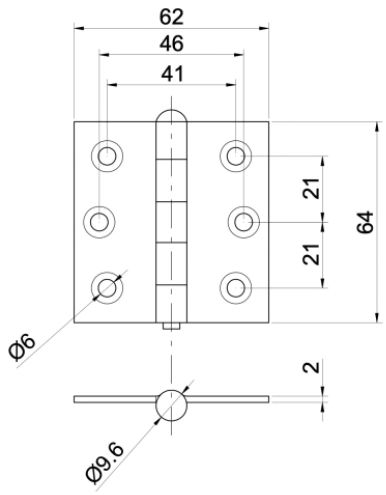

Quality	Finish	art.	Gmax/2pcs (kg)
AISI304	raw	D8/85-64	40

new

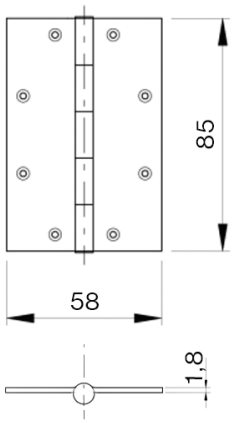

Quality	Finish	art.	Gmax/2pcs (kg)
AISI304	satin	D8/86-85	30

new

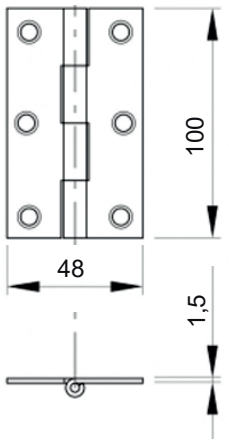

Quality	Finish	art.	Gmax/2pcs (kg)
AISI304	raw	D8/87-100	25

new

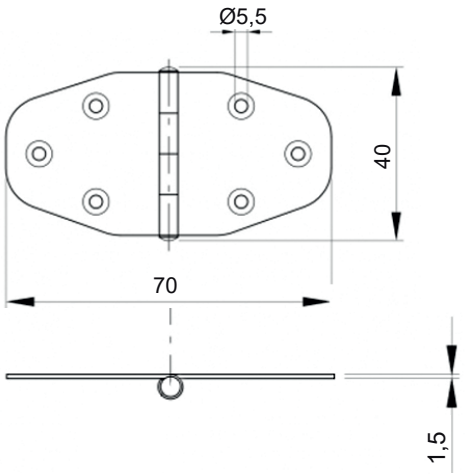

Quality	Finish	art.	Gmax/2pcs (kg)
AISI304	raw	D8/88-40	25

new

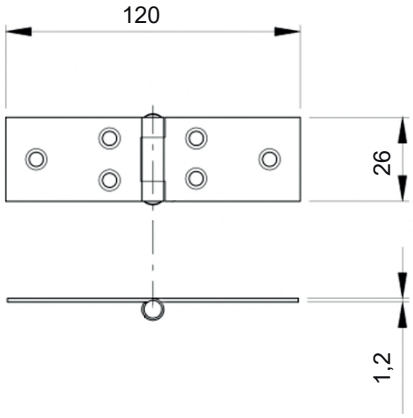

Quality	Finish	art.	Gmax/2pcs (kg)
AISI304	raw	D8/89-26	25

new

MODEL **FIX-SPRING**

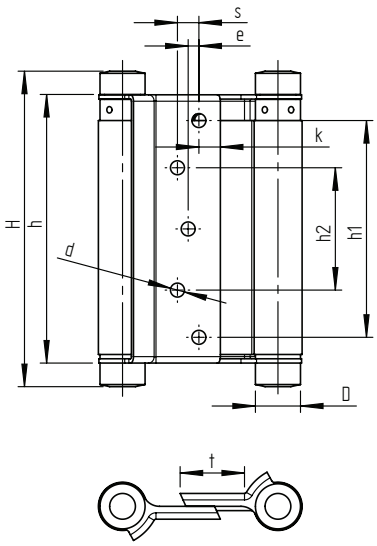

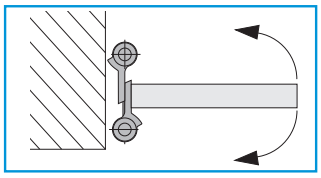

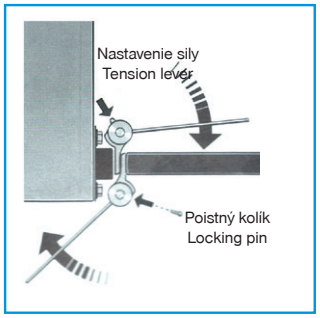

Quality	Finish	art.	H	h	h1	h2	D	d	k	s	e	t	Gmax/2pcs (kg)
AISI304	satin	D8/69-75	92	77	56	32	18	5,5	9	7	-	20	15
		D8/69-100	117	102	77	42	18	5,5	10	7	-	22	22
		D8/69-125	141	126	92	45	20	6,5	11	9	-	28	27
Fe	BRASS	D4/69B-75	98	75	54	21	21	4,5	8,5	6	-	22	15
		D4/69B-100	122	100	78	45	21	5,5	8	9	-	24	22
		D4/69B-125	147	125	101	57	21	5,5	10	11	5	31	27
		D4/69B-150	172	150	126	80	26	5,5	9	14	6	35	40
	Ni	D4/69N-75	97	75	55	24	20	4,5	8	4	-	22	15
		D4/69N-100	124	100	76	43	22	4,5	9	7	-	28	22
		D4/69N-125	148	125	102	57	22	5	9,5	11	6	32	27
		D4/69N-150	172	150	126	80	26	5,5	9,5	14	8	42	40

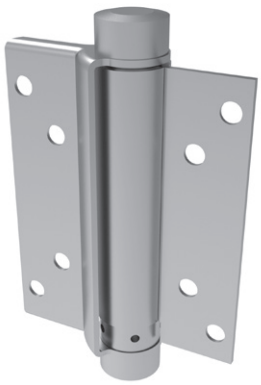

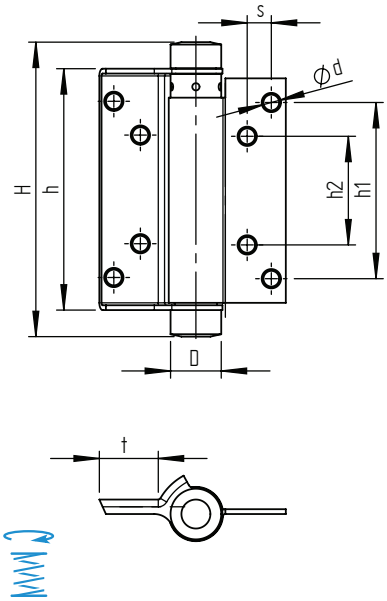

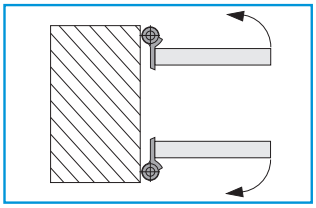

Quality	Finish	art.	H	h	h1	h2	D	d	k	s	t	Gmax/2pcs (kg)
Fe	raw	D4/72Fe-100	122	100	78	45	21	5,5	8,5	9	25	22
	Ni	D4/72N-100										
AISI304	raw	D8/72i-75	93	77	53	26	18	5,5	9	6		15
		D8/72i-100	117	102	78	43	18	5,5	10,5	7		22
		D8/72i-125	141	126	92	45	20	6,5		9	31	27

MODEL FIX-SPRING

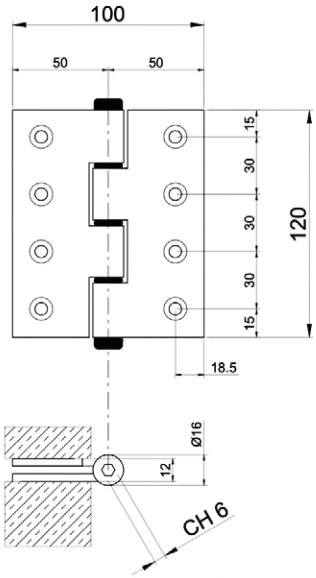

Quality	Finish	art.	Color	Gmax/2pcs (kg)
ALUMINIUM	natural	D4/72AL-120-GREY	grey	20

new

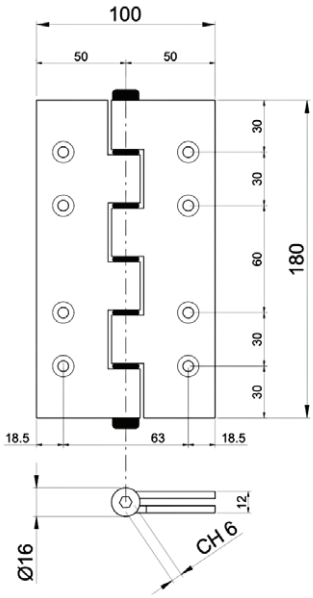

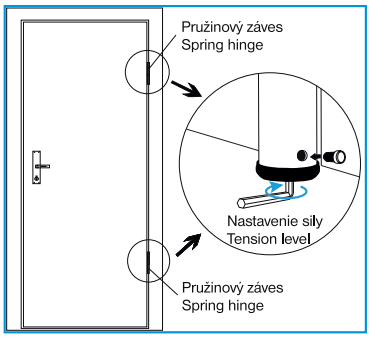

Quality	Finish	art.	Color	Gmax/2pcs (kg)
ALUMINIUM	natural	D4/72AL-180-GREY	grey	30
		D4/72AL-180-WHITE	white	

new
new

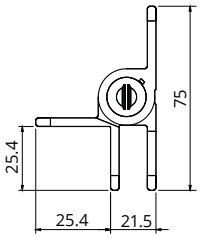

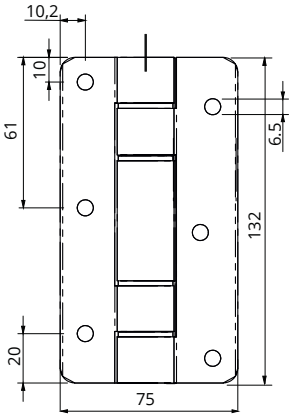

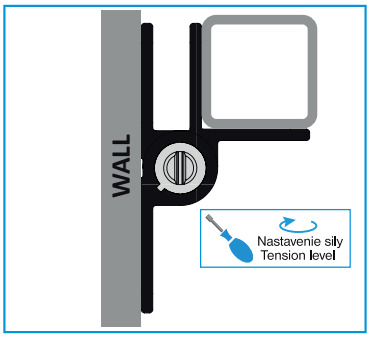

Quality	Finish	art.	Color	Gmax/2pcs (kg)
ALUMINIUM	natural	D4/73AL-W-130-BLACK	black	20

new

HINGES

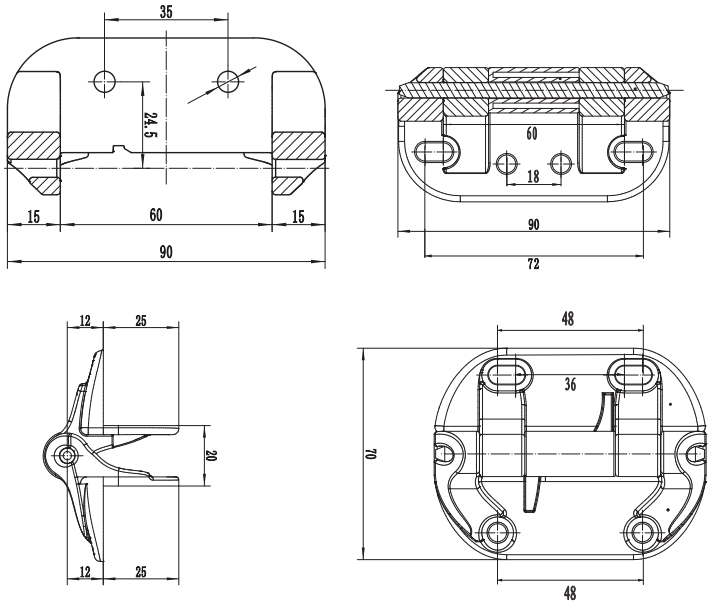

Quality	Finish	art.	Tension	Gmax/2pcs (kg)
fiber-reinforced **polymer**	**raw**	**D19/01N-90L**	neutral	28

new

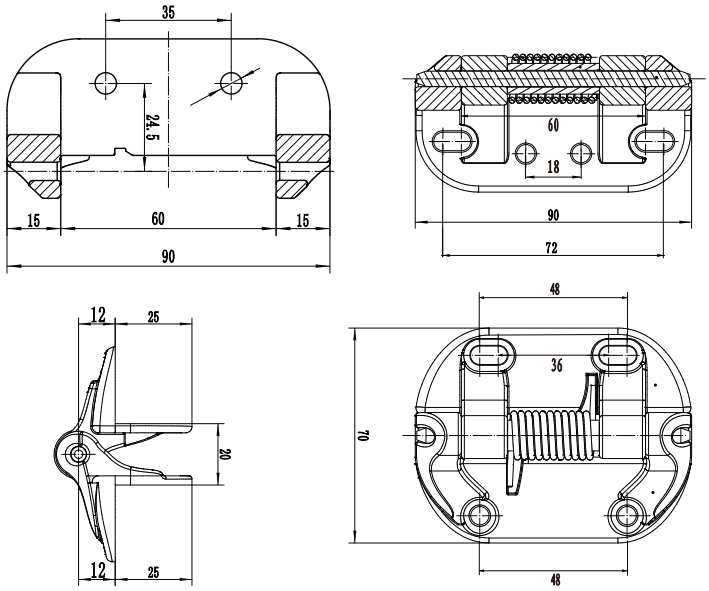

Quality	Finish	art.	Tension	Gmax/2pcs (kg)
fiber-reinforced **polymer**	**raw**	**D19/01F-90L**	fixed	28

new

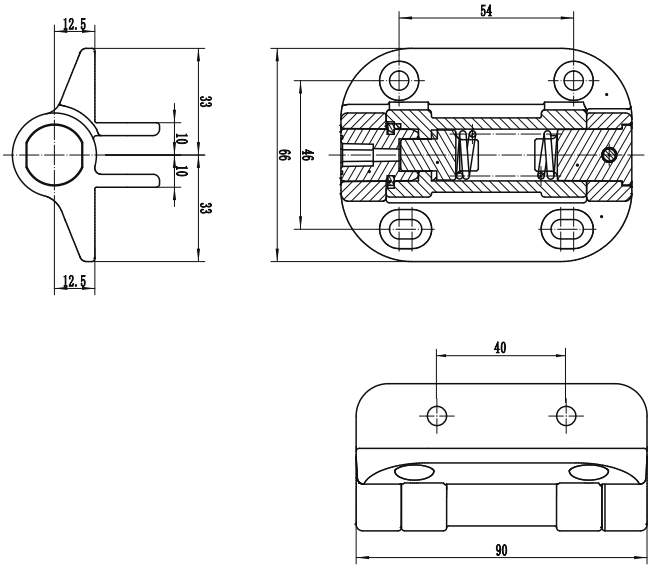

Quality	Finish	art.	Tension	Gmax/2pcs (kg)
fiber-reinforced **polymer**	**raw**	**D19/04G-90L**	adjustable	70

new

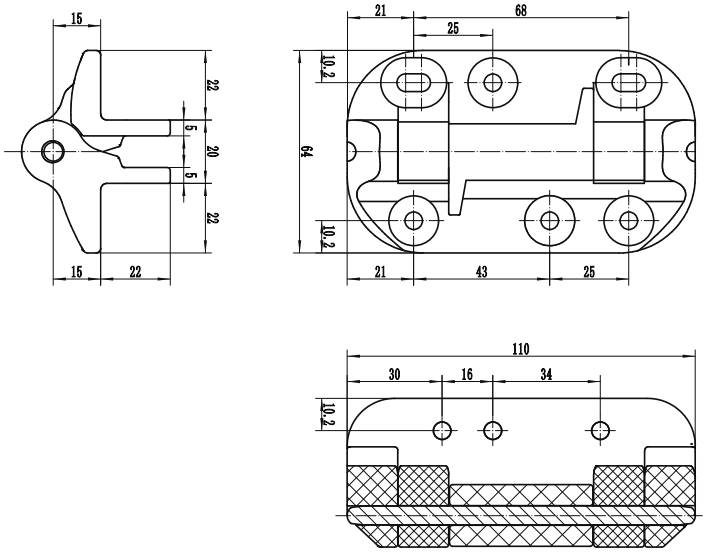

Quality	Finish	art.	Tension	Gmax/2pcs (kg)
fiber-reinforced **polymer**	**raw**	**D19/02N-110L**	neutral	35

new

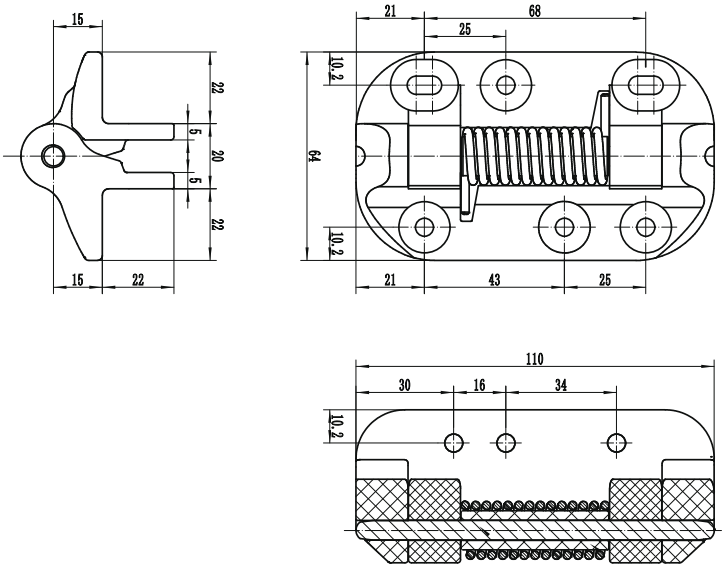

Quality	Finish	art.	Tension	Gmax/2pcs (kg)
fiber-reinforced **polymer**	**raw**	**D19/02F-110L**	fixed	35

new

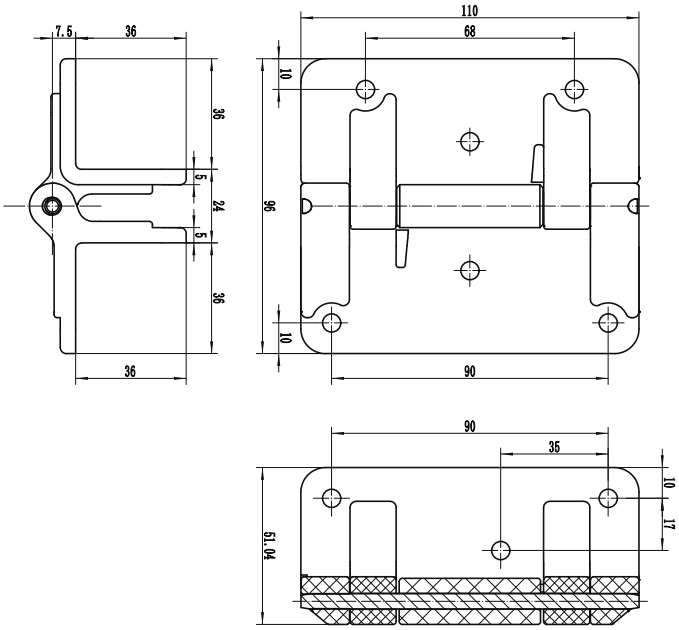

Quality	Finish	art.	Tension	Type	Gmax/2pcs (kg)
fiber-reinforced **polymer**	**raw**	**D19/03N-110L**	neutral	wide leaf	35

new

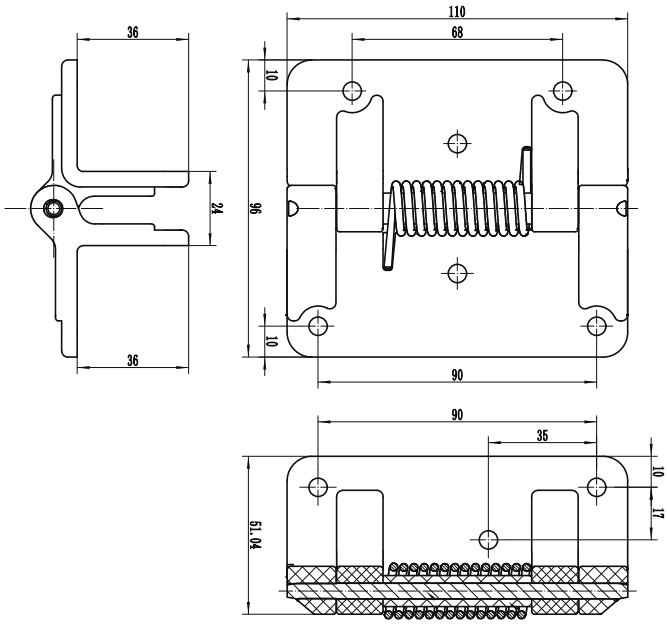

Quality	Finish	art.	Tension	Type	Gmax/2pcs (kg)
fiber-reinforced **polymer**	**raw**	**D19/03F-110L**	fixed	wide leaf	35

new

MODEL REINFORCED POLYMER - FOR ALUMINIUM GATES

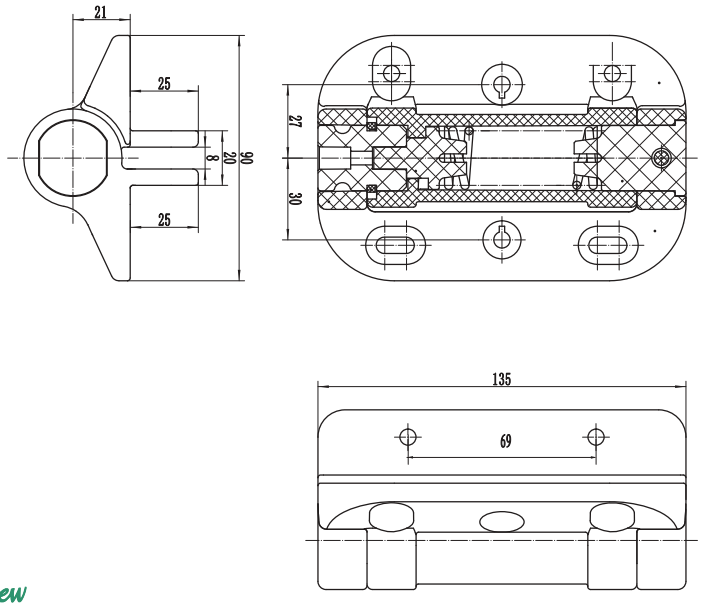

Quality	Finish	art.	Tension	Type	Gmax/2pcs (kg)
fiber-reinforced **polymer**	**raw**	**D19/05G-135L**	adjustable	heavy duty	480

new

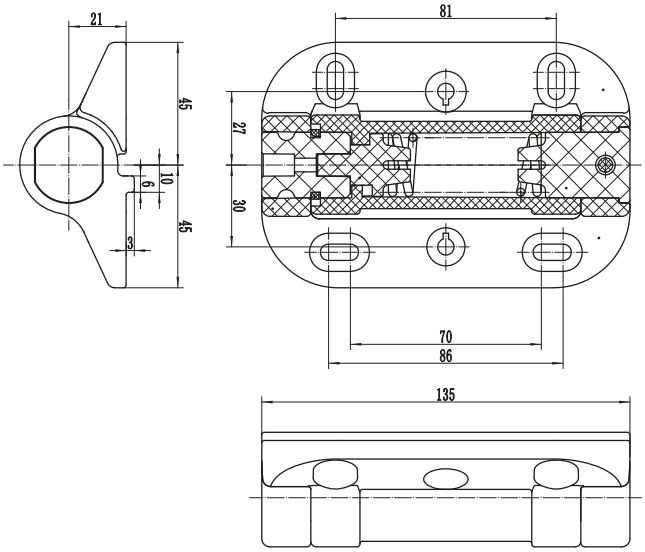

Quality	Finish	art.	Tension	Type	Gmax/2pcs (kg)
fiber-reinforced **polymer**	**raw**	**D19/05G-135**	adjustable	heavy duty (no legs)	480

new

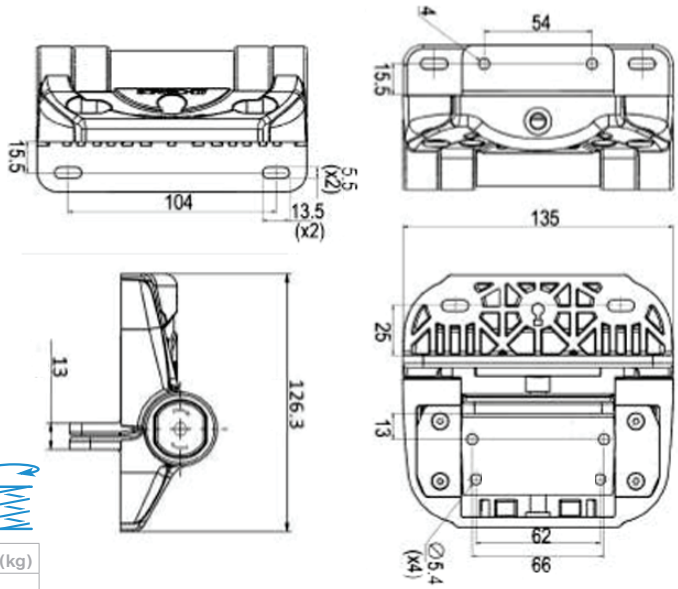

Quality	Finish	art.	Tension	Type	Gmax/2pcs (kg)
fiber-reinforced **polymer**	**raw**	**D19/06GA-135L**	adjustable	heavy duty (fully adjustable)	360

new

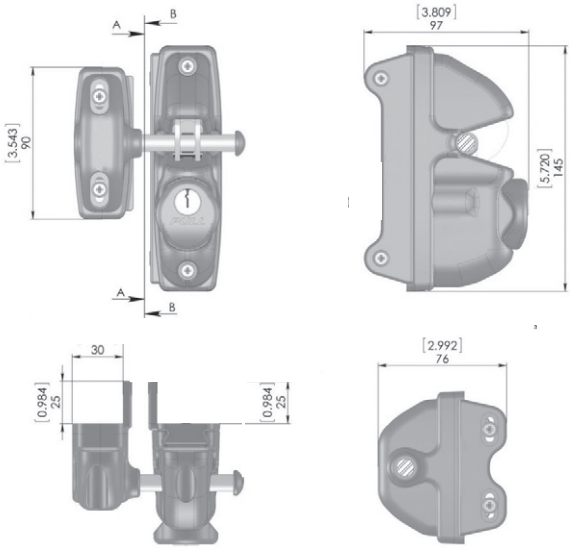

Quality	Finish	art.	type	
fiber-reinforced **polymer**	**raw**	**B19/01S**	hooked (single sided)	✓

new

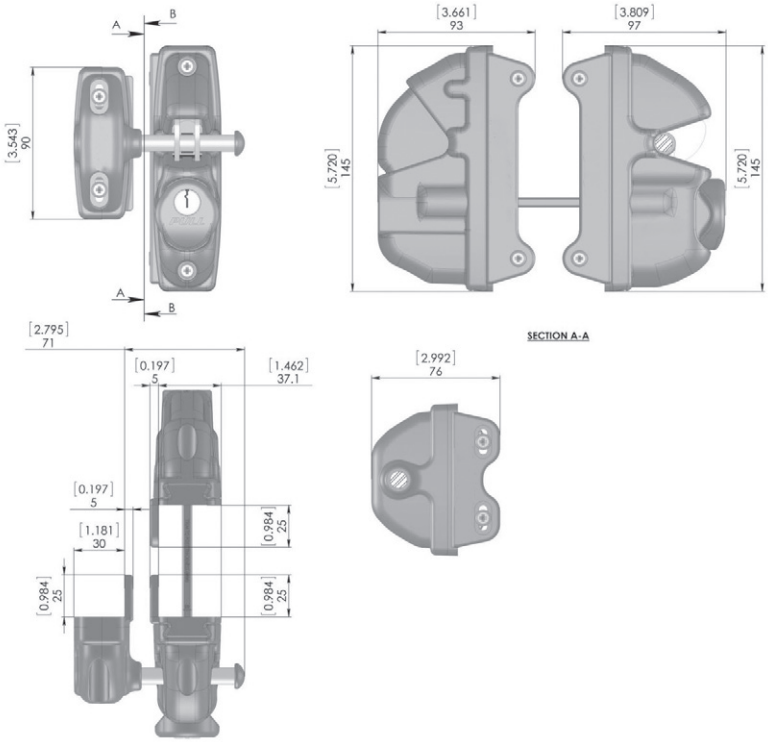

Quality	Finish	art.	type	
fiber-reinforced **polymer**	**raw**	**B19/01D**	hooked (double sided)	✓

new

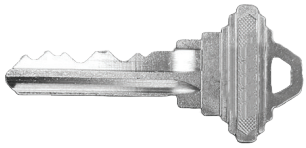

art.	for
B19/01-KEY	B19/01S B19/01D

new

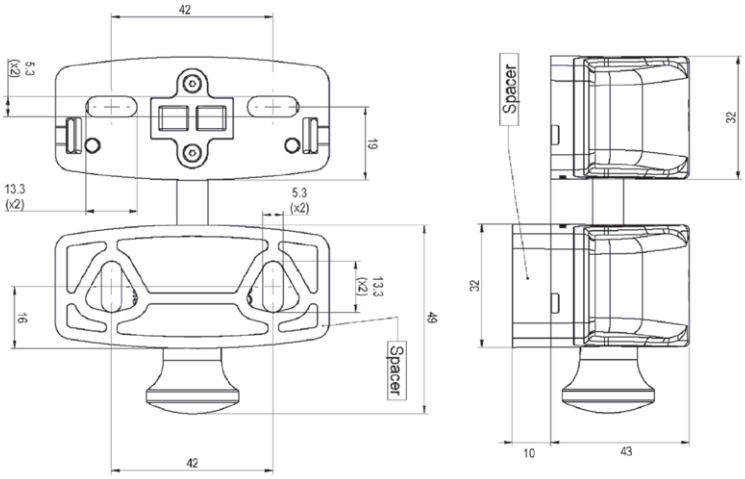

Quality	Finish	art.	type
fiber-reinforced **polymer**	**raw**	**B19/02S**	magnetic (side pull)

new

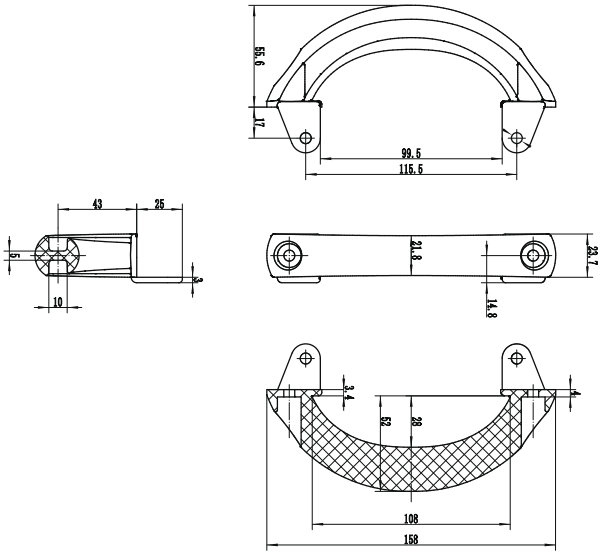

Quality	Finish	art.
fiber-reinforced **polymer**	**raw**	**B19/06-150**

new

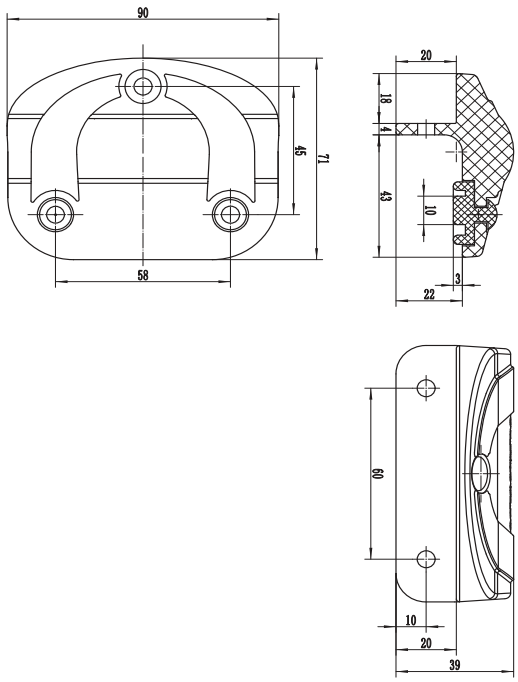

Quality	Finish	art.
fiber-reinforced **polymer**	**raw**	**B19/05S-45**

new

A-FS-150/60-JP

A-FS-110-D

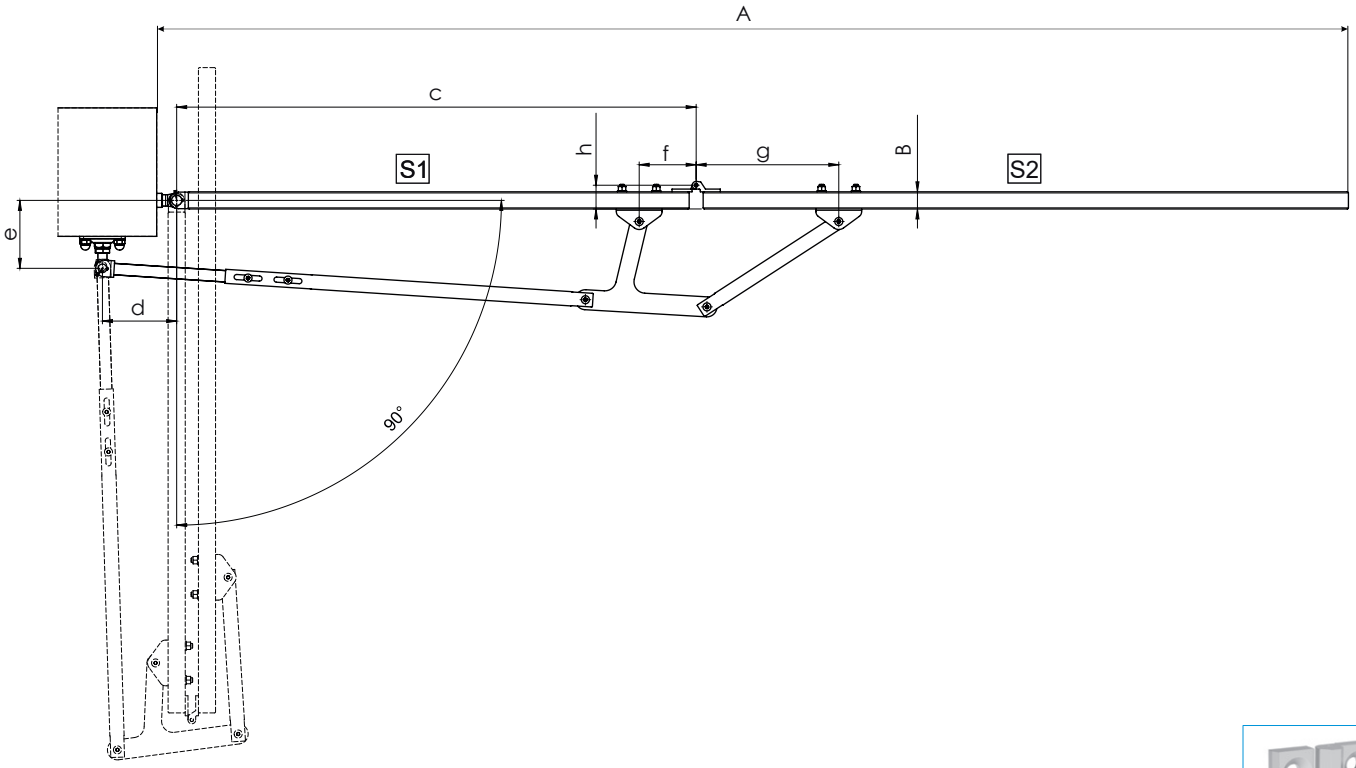

Quality	Finish	art.	A	B	c	d	e	f	g	h
AISI304	raw	A-FS-110-D	1500-3000	30,40	750-1200	130	115	100	250	40
		A-FS-150/60-JP	1800-3500	50,60	900-1500	150	155	120	270	65

new

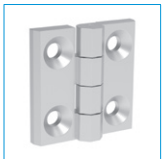

D16/77-60

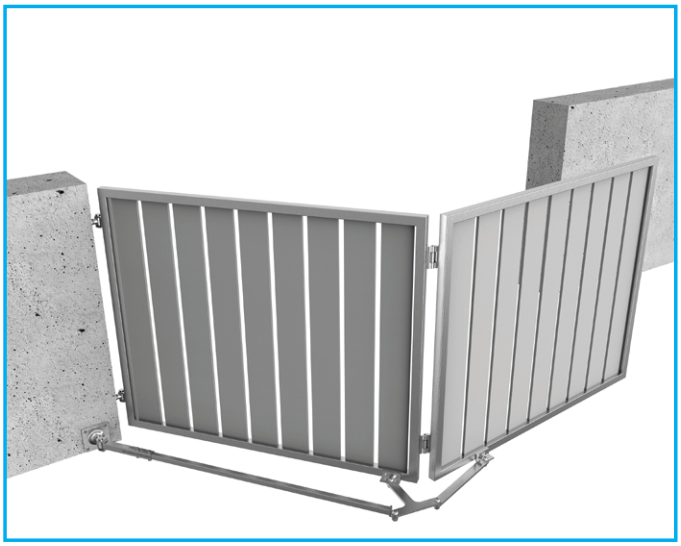

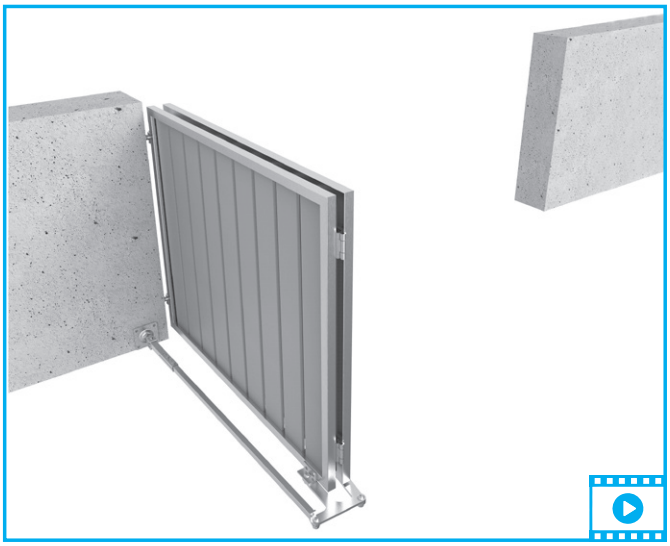

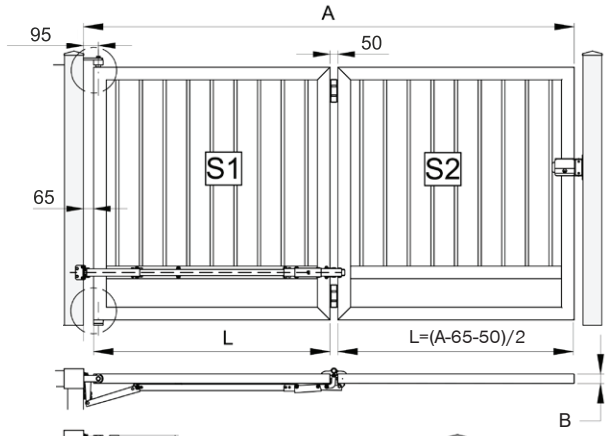

A	L	max S2 (kg)
2000	940	205
2500	1190	170
3000	1440	145
3500	1690	120
4000	1940	105
4500	2190	95
5000	2440	85

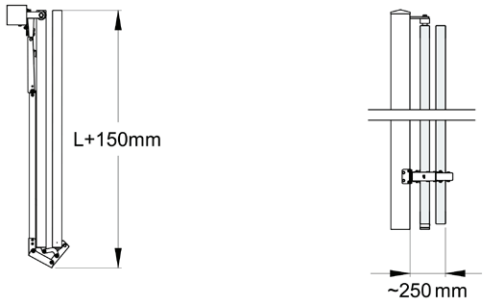

Quality	Finish	art.	A	B
Fe	Zn	FS-250	1900-5000	40/50/60

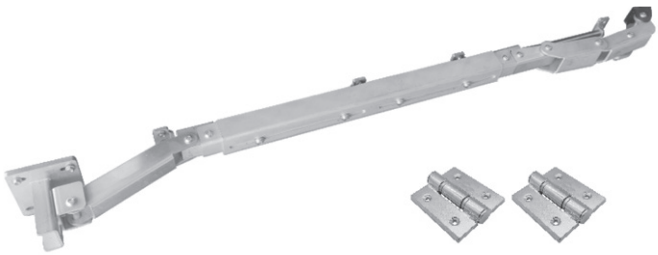

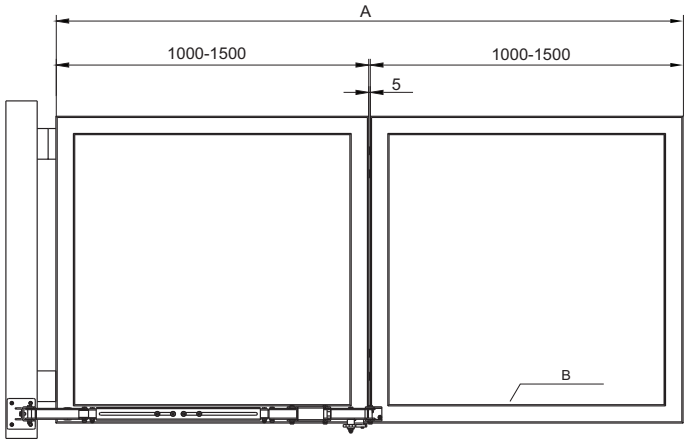

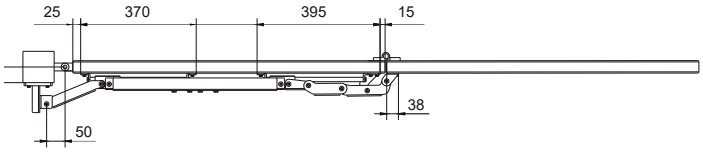

Quality	Finish	art.	A	B
Fe	Zn	FS-150	2000-3000	50/60

new

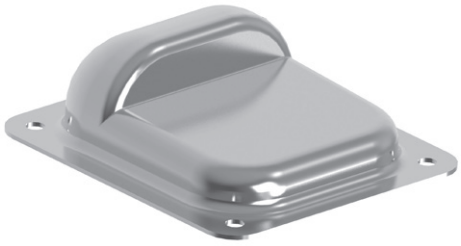

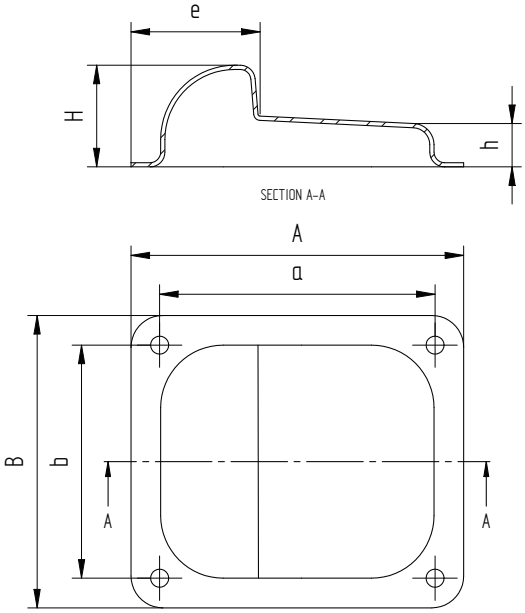

Quality	Finish	art.	A	a	B	b	H	h	e
Fe	Zn	B1/32	158	130	138	110	50	22	60
AISI304	raw	B8/32							
Fe	Zn	B1/32-S	120	95	100	75	42	20	45
AISI304	raw	B8/32-S							

top

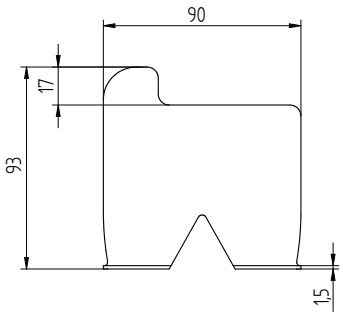

Quality	Finish	art.
Fe	Zn	B1/51

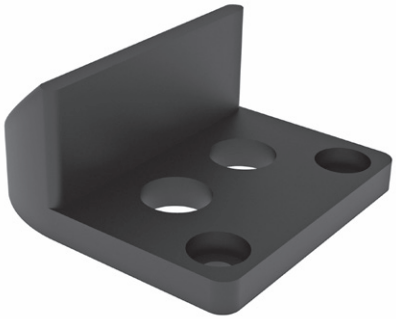

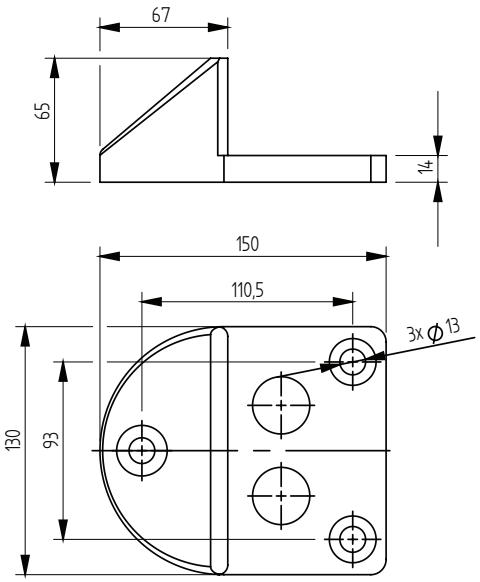

Quality	Finish	art.
Rubber	black	B1/32-G

STOPPERS

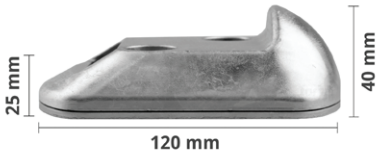

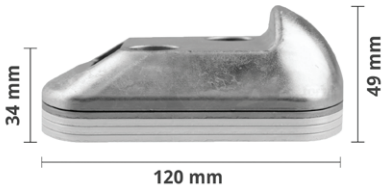

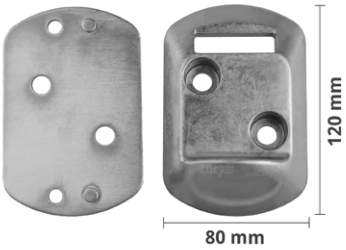

Quality	Finish	art.
Fe	Zn	B1/35-EL

new

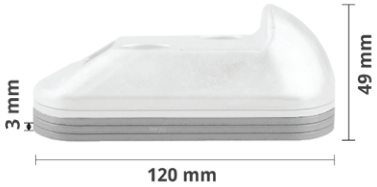

Quality	Finish	art.
Fe	Zn	B1/35-EL-PLATE

new

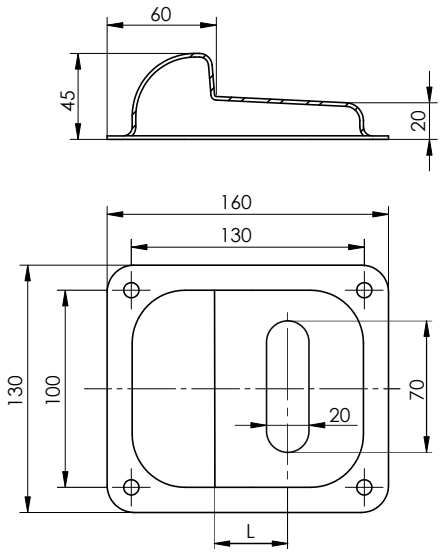

Quality	Finish	art.	L
Fe	Zn	B1/36-52,5	52,5
		B1/36-66	66

new
new

STOPPERS

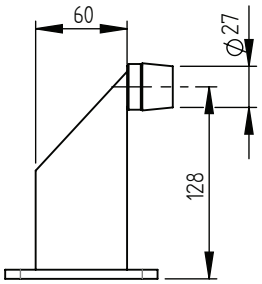

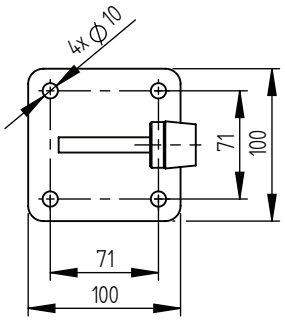

Quality	Finish	art.	Color	
Fe	Zn	H/10B-60x130	-	
		H/10B-60x130-R9005	RAL 9005	new
		H/10B-60x130-R7016	RAL 7016	new
AISI304	raw	H8/10B-60x130	-	

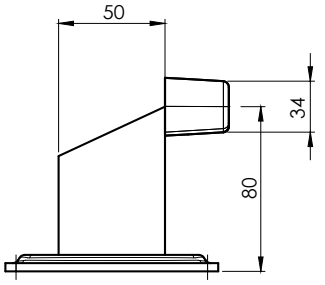

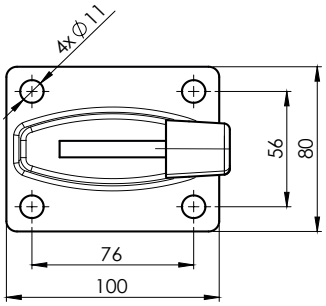

Quality	Finish	art.	Color	
Fe	Zn	H/10B-50x80	-	
		H/10B-50x80-R9005	RAL 9005	new
		H/10B-50x80-R7016	RAL 7016	new

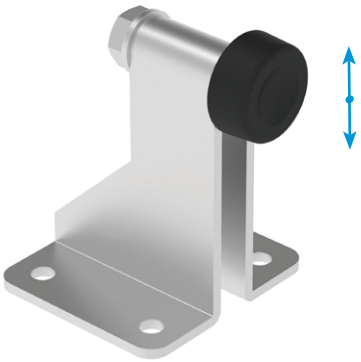

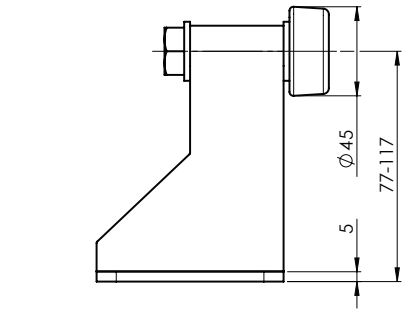

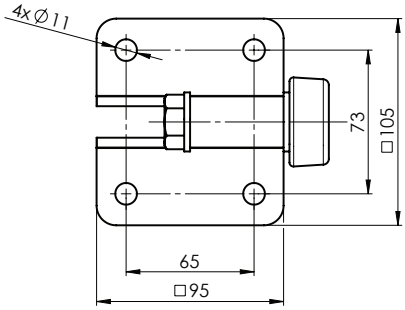

Quality	Finish	art.	
Fe	Zn	H/10B-50x120	new

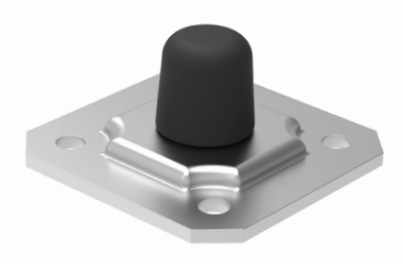

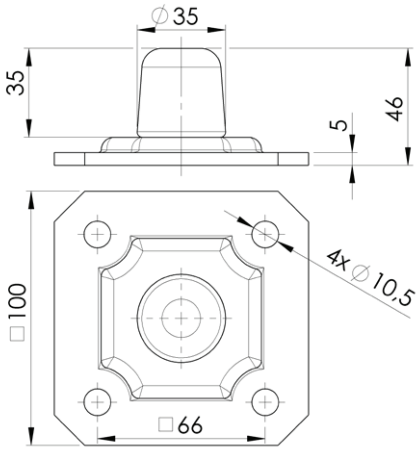

Quality	Finish	art.
Fe	Zn	H/10B-35x46

new

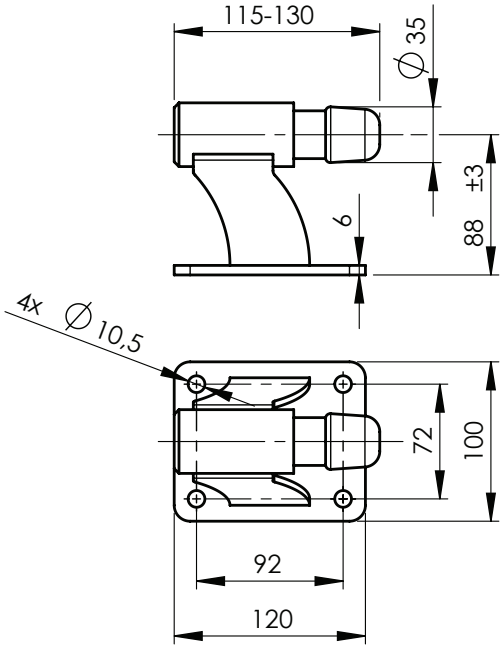

Quality	Finish	art.
Fe	Zn	H/10B-130x85-SPRING

new

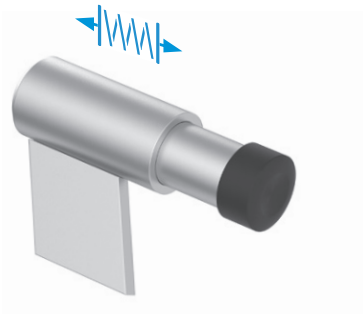

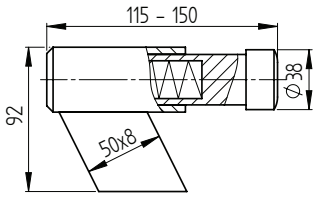

Quality	Finish	art.
Fe	Zn	H/10BP-150x92-SPRING

new

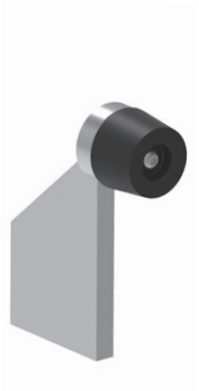

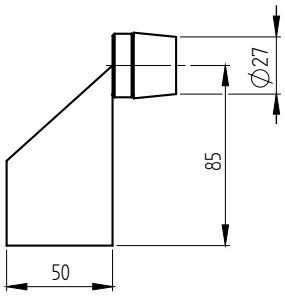

Quality	Finish	art.
Fe	Zn	H/10BP-50x100

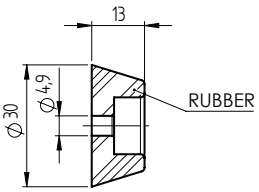

Quality	Finish	art.
Rubber	black	B1/16G

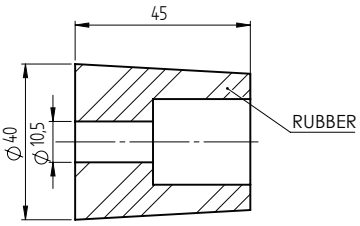

Quality	Finish	art.
Rubber	black	B1/16G-B

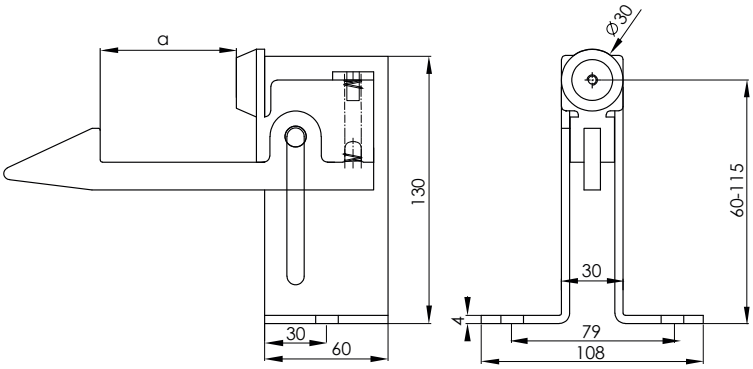

Quality	Finish	art.	a	
Fe	Zn	H/58-43	43	new
		H/58-63	63	new

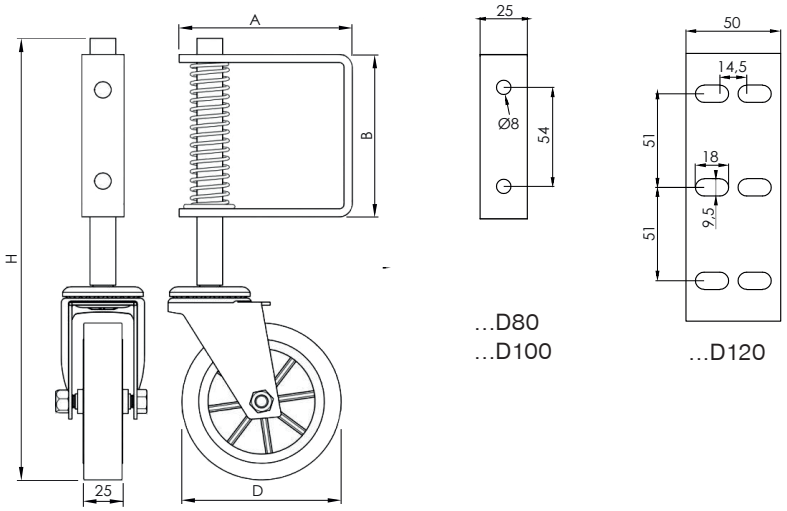

...D80
...D100

...D120

Quality	Finish	art.	D	H	A	B	
Fe	Zn	H/PK01-D80	76	260	96	87	new
		H/PK01-D100	102	280	110	90	new
		H/PK01-D120	123	355	130	146	new

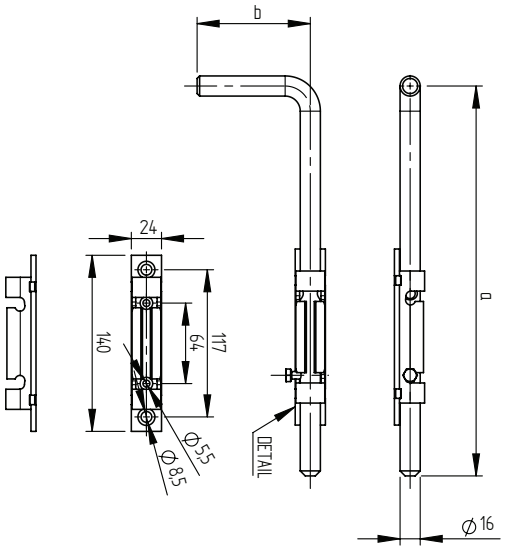

Quality	Finish	art.	a	b	
Fe	Zn	D7/12-200	200	82	
AISI304	raw	D8/12-300	300	90	✓
Fe	Zn	D7/12-300			
		D7/12-500	500		
AISI304	raw	D8/12L-500			

top

new

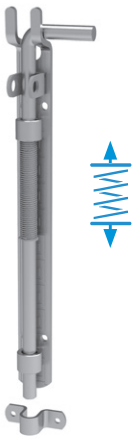

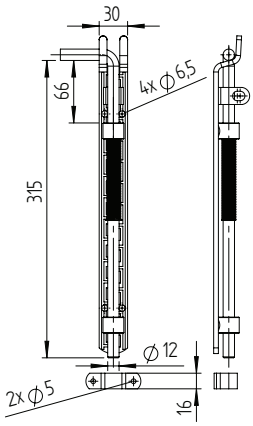

Quality	Finish	art.	
Fe	Zn	D7/24-315	✓

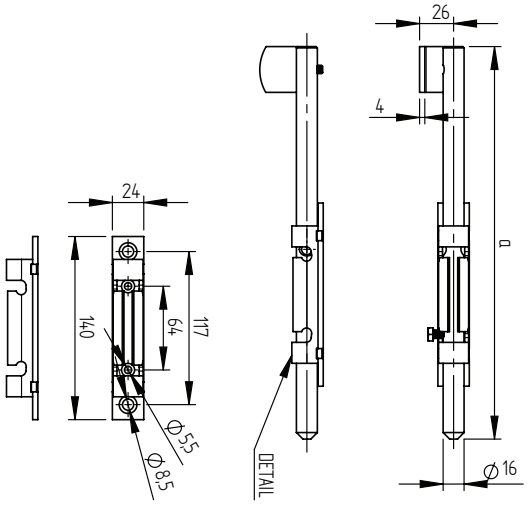

Quality	Finish	art.	a	
Fe	Zn	D7/19-300	300	✓
		D7/19-500	500	

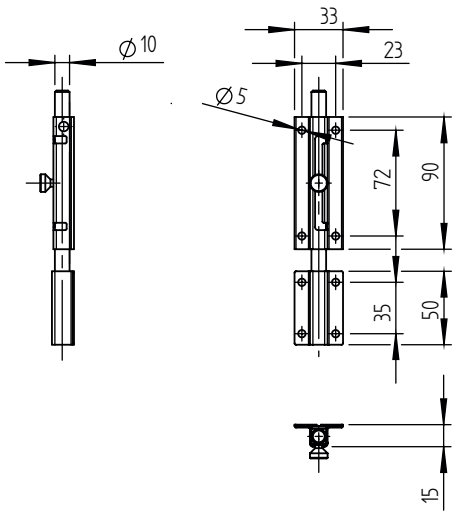

Quality	Finish	art.	
Fe	Zn	D7/16-150	✓

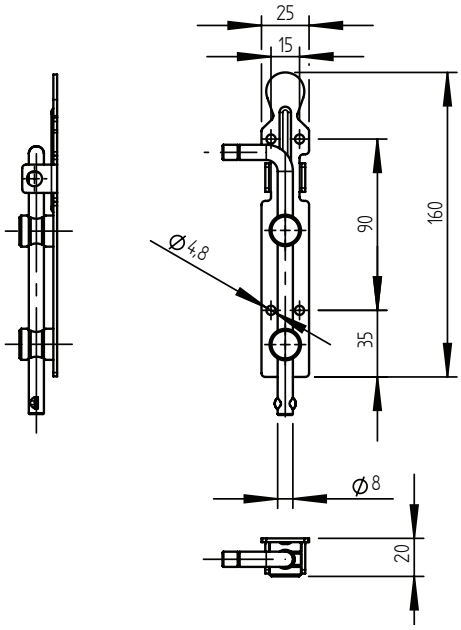

Quality	Finish	art.	
Fe	Zn	D7/17-160	✓

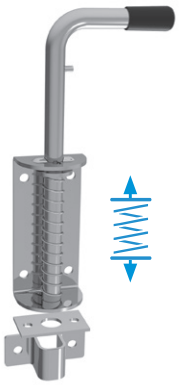

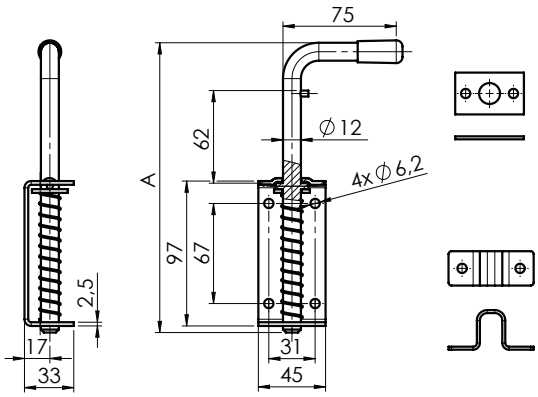

Quality	Finish	art.	A	
Fe	Zn	D7/25-200	200	-
		D7/25-300	300	
		D7/25-400	400	

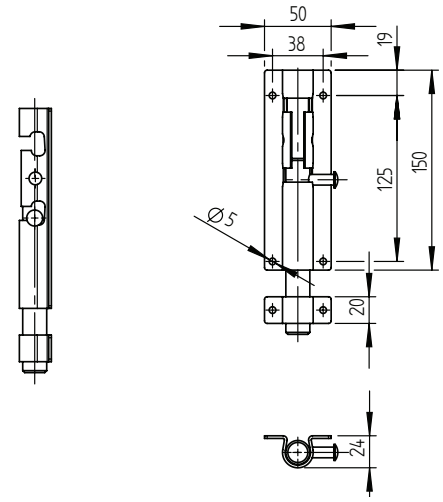

Quality	Finish	art.	
Fe	Zn	D7/23-150	✓

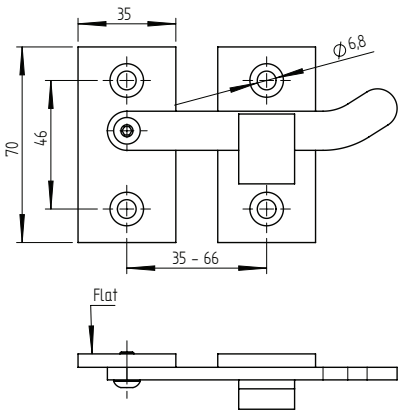

Quality	Finish	art.	Ø
AISI316	satin	D16/74-70-000	Flat

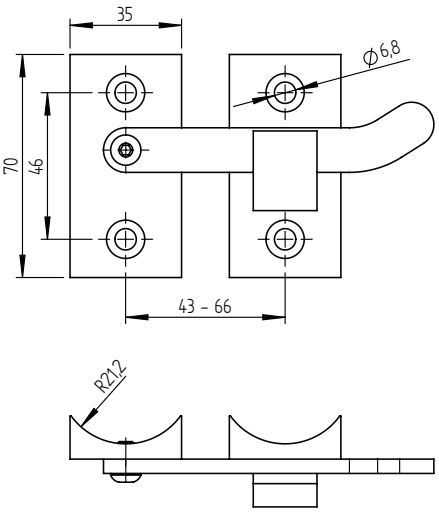

Quality	Finish	art.	Ø
AISI304	satin	D8/74-70-042	42,4
AISI316		D16/74-70-042	

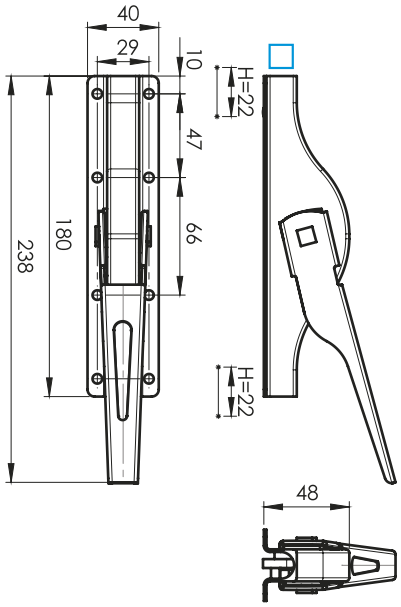

Quality	Finish	art.	TIAHLO (ROD)	
Fe	Zn	D7/22-180	12x12	-

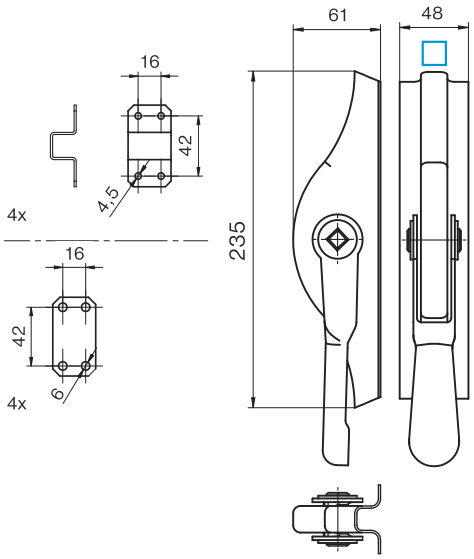

Quality	Finish	art.	TIAHLO (ROD)	
Fe	Zn	D7/22-235-Zn	14x14	-
	raw	D7/22-235-Fe		

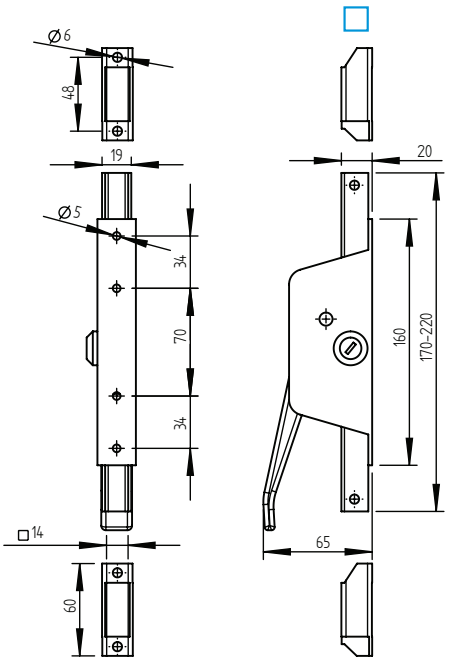

Quality	Finish	art.	TIAHLO (ROD)	
Fe	Zn	D7/22-160	14x14	✓

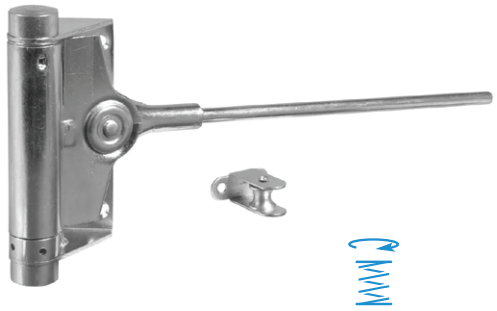

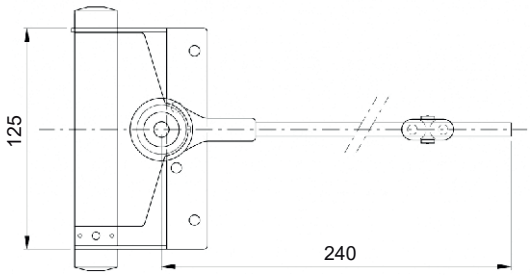

Quality	Finish	art.	Gmax/2pcs (kg)
Fe	raw	D10/01I-120	60

new

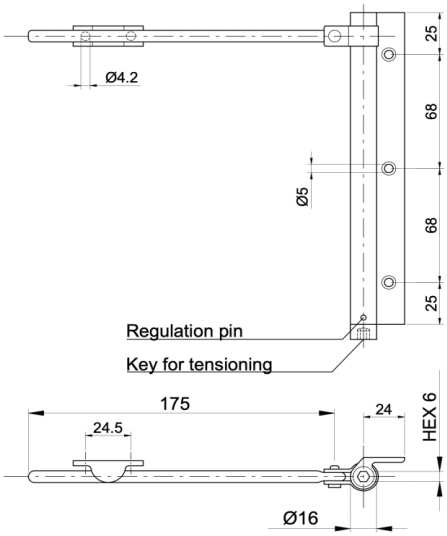

Quality	Finish	Color	art.	Gmax/2pcs (kg)
ALUMINIUM	natural	black	D10/03AL-190-BLACK	40
		grey	D10/03AL-190-GREY	

new

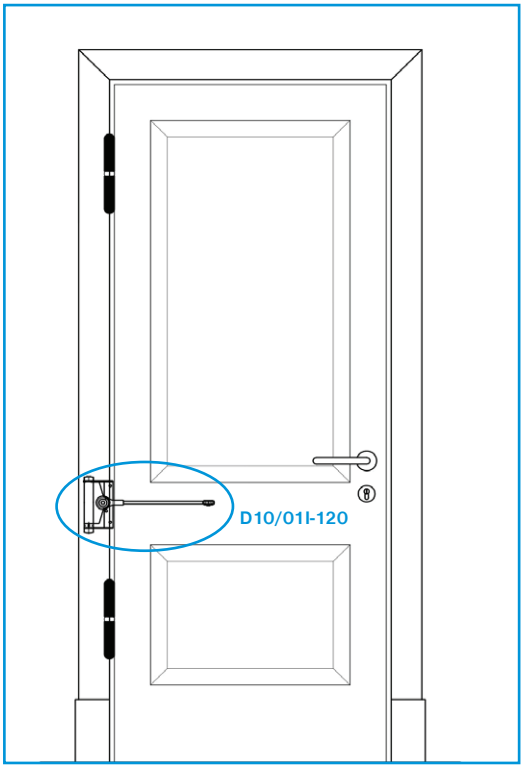

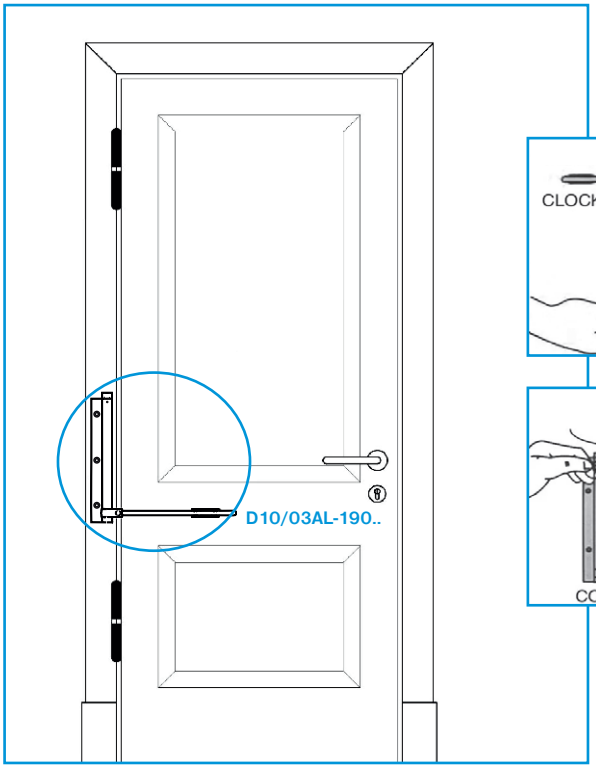

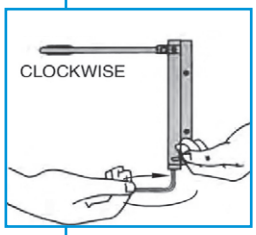

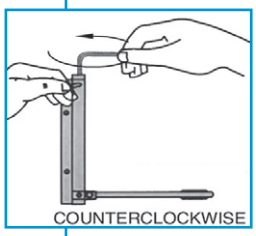

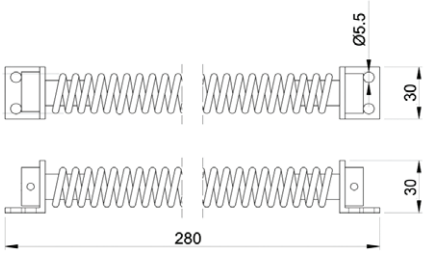

Quality	Finish	art.	Gmax/2pcs (kg)
AISI304	raw	D10/05I-280	60

new

Quality	Finish	art.	Norm	Dimensions	Door: ⟷ /G/°max
ALUMINIUM	natural	WS/Z-101	EN1154, EN:2-3	230x33x57	1200mm/65kg/120°

Quality	Finish	Color	art.	Norm	Dimensions	Door: ⟷ /G/°max
AISI304	satin	-	WS/Z-104	EN1154, EN:2-3	182x41x63	900mm/60kg/180°
ALUMINIUM	natural	black	WS-BLACK/Z-104			

new

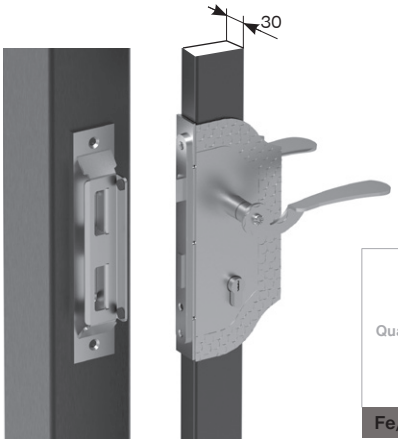

Quality	set								
Fe/Zn	BR/30x30-set S	B1/62U-40	B1/34-32A	D1/14AL	D1/14AR	B1/33-30	B1/30-50A	B1/19N	D2/28-Zn

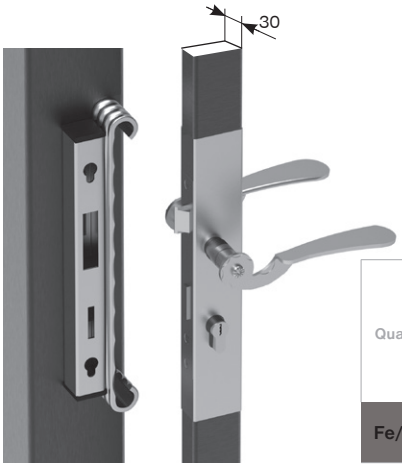

Quality	set							
Fe/Zn	BR/30x30-set	B1/07T-30	B1/09-50M	E2/258-30x30	B1/52J-30x30	B1/30-17x82	B1/19N	D2/07-Zn
	BR/50x30-set				B1/58J-50x30	B1/30-35x90		

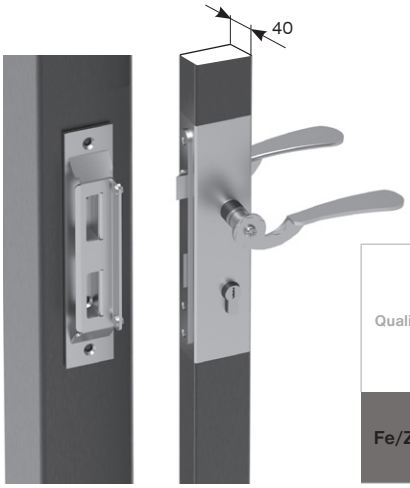

Quality	set					
Fe/Zn	BR/40x40-set	B1/62U-40	B1/58J-40x40	B1/30-22x90	B1/19N	D2/28-Zn
	BR/60x40-set		B1/58J-60x40	B1/30-40x90		
	BR/80x40-set		B1/58J-80x40	B1/30-50A		

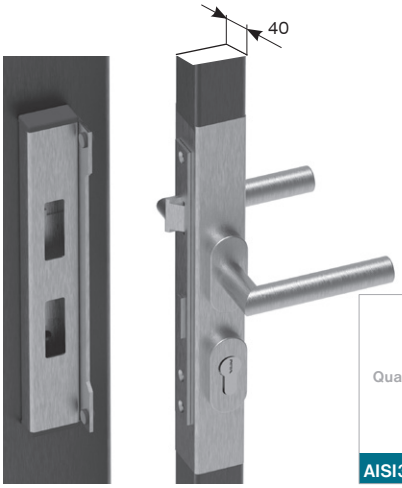

Quality	set					
AISI304	BR8/40x40-set	B8/62-40x20	B8/39J-40x40-A	B8/30-20x85	B1/19N	D8/05-i

Quality	set	12-24 Vac/Vdc										
Fe/Zn	BR/30x30-set ES	B1/18-LC	B1/61U-40	B1/34-32A	D1/14AL	D1/14AR	B1/33-30	B1/30-50A	B1/19N	D2/28-Zn	D5/11-Zn	D0/05-Zn

Quality	set	6-14 Vac/Vdc									
Fe/Zn	BR/30x30-set E	B1/18-I	B1/07T-30	B1/09-50M	E2/ 258-30x30	B1/52J-30x30	B1/30-17x82	B1/19N	D2/07-Zn	D5/11-Zn	D0/05-Zn
	BR/50x30-set E					B1/58J-50x30	B1/30-35x90				

Quality	set	12-24Vac/Vdc							
Fe/Zn	BR/40x40-set E	B1/18-LC	B1/61U-40	B1/58J-40x40	B1/30-22x90	B1/19N	D2/28-Zn	D5/11-Zn	D0/05-Zn
	BR/60x40-set E			B1/58J-60x40	B1/30-40x90				
	BR/80x40-set E			B1/58J-80x40	B1/30-50A				

Quality	set	12-24Vac/Vdc						
AISI304	BR8/40x40-set E	B1/18-LC	B8/61-40x40	B8/39J-40x40-A	B8/30-20x85	B1/19N	D8/05-i	D8/04-i

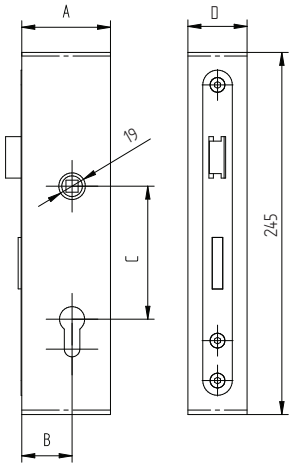

Quality	Finish	art.	A	B	C	D
Fe	raw	B1/60-40x40	40	21,5	90	40
		B1/59-50x30	50	34	72	30
		B1/59-60x40	60			40

B1/62U-40
B1/61U-40
B1/07T-40

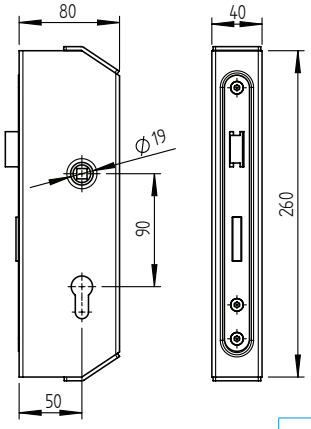

Quality	Finish	art.
Fe	raw	B1/48-80x40

B1/62U-40
B1/61U-40
B1/07T-40

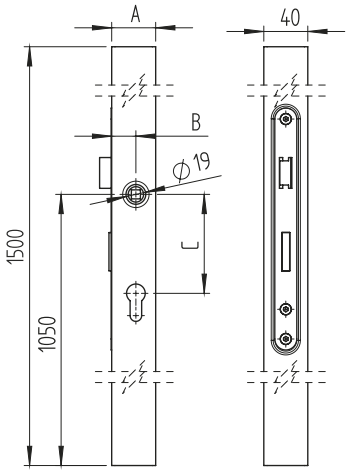

Quality	Finish	art.	A	B	C
Fe	raw	B1/63-40x40x1500	40	22	90
		B1/63-60x40x1500	60	34	72

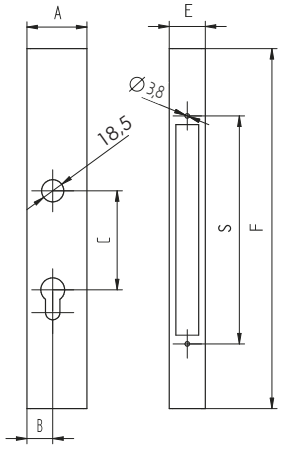

Quality	Finish	art.	A	B	C	E	F	s	
AISI304	satin	B8/58J-40x40	40	19		40		200	B1/30-22x90
Fe	raw	B1/58J-40x40							
		B1/58J-50x30	50	32,5	90	30	260	215	B1/30-35x90
		B1/58J-60x40	60	37,5					B1/30-40x90
		B1/58J-80x40	80	47					B1/30-50A
AISI304	satin	B8/39J-40x40-A				40		210	B8/30-20x85
		B8/39J-40x40	40	18,5	85				
Fe	raw	B1/39J-40x40							B1/30-20x85
		B1/39J-50x30	50			30	300		
		B1/52J-30x30	30	13					B1/30-17x82
		B1/52J-40x40	40	21,5	82	40		190	B1/30-25,5x82
		B1/52J-50x30	50			30			

new

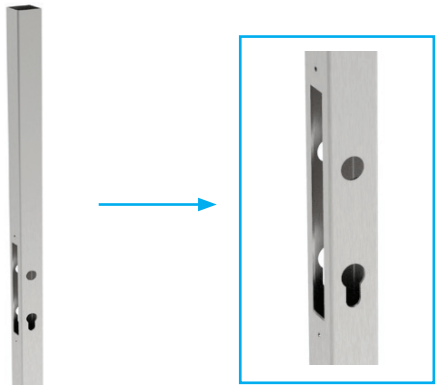

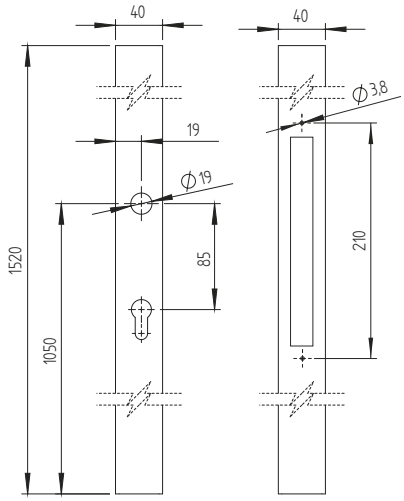

Quality	Finish	art.	
AISI304	satin	B8/63-40x40x1500	B8/30-20x85

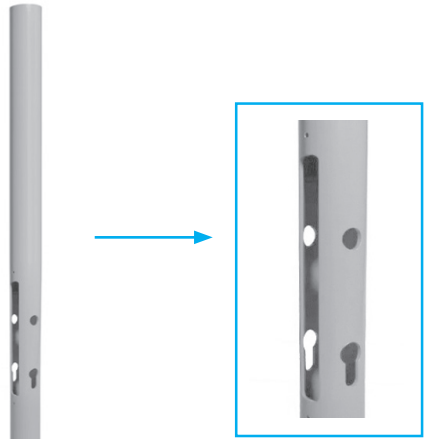

Quality	Finish	art.	
AISI304	satin	B8/63-D42x1500	B8/30-20x85

new

B1/65

MODEL **STANDARD**

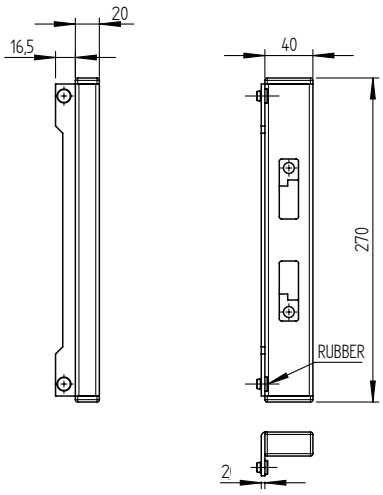

Quality	Finish	art.
AISI304	satin	B8/62-40x20

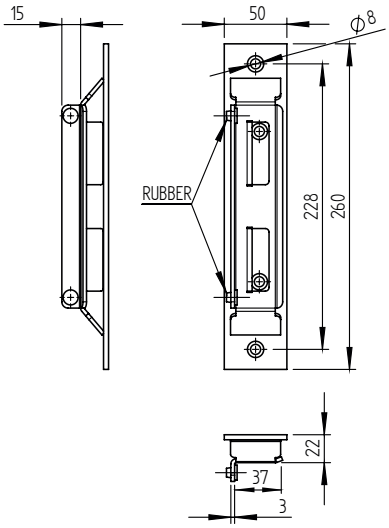

Quality	Finish	art.
Fe	Zn	B1/62U-40

top

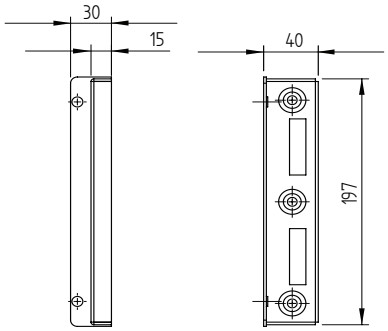

Quality	Finish	art.
Fe	Zn	B1/62U-40x30

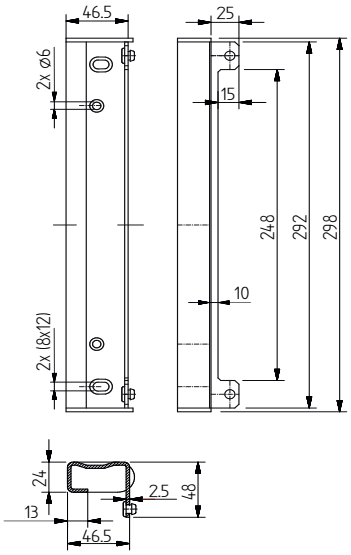

Quality	Finish	art.
Fe	Zn	B1/62U-45x45

MODEL ELECTRO-MAGNETIC

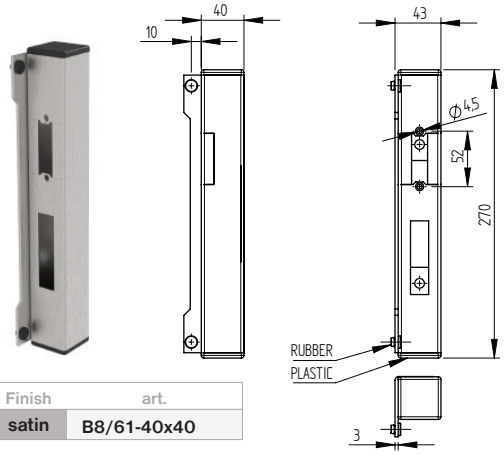

Quality	Finish	art.
AISI304	satin	B8/61-40x40

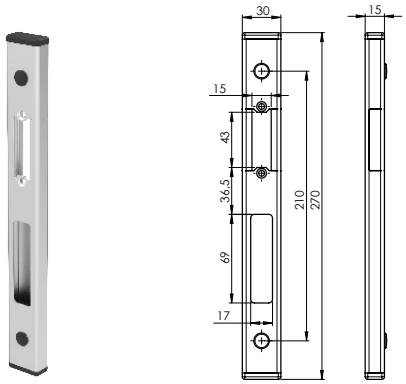

Quality	Finish	art.
AISI304	satin	B8/07T-30x15


B1/18-LC
B1/18-F

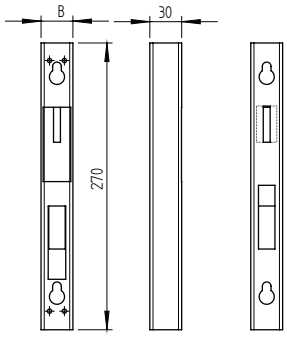


B1/09-50H
B8/09-50H


B1/18-I
B8/18-LC

Quality	Finish	art.	B
Fe	raw	B1/07T-30	30
AISI304	satin	B8/07T-30	
Fe	raw	B1/07T-40	40
AISI304	satin	B8/07T-40	

Univerzálny doraz pre klasický alebo elektromagnetický zámok.
Universal stop box for clasical or electromagnetic lock.


B1/61-46x36-L B1/61-46x36-P

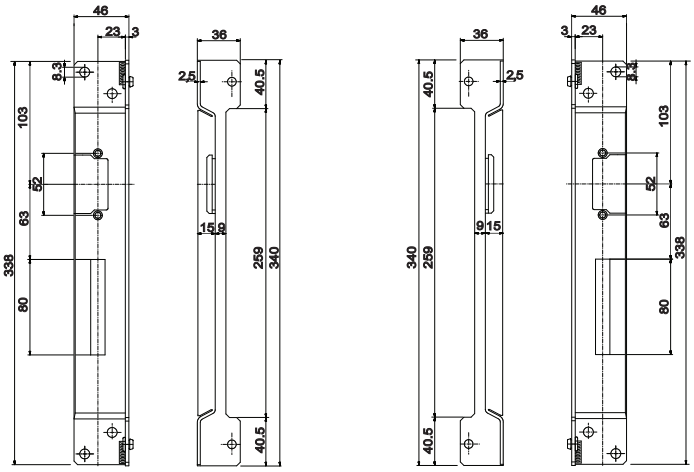

B1/61-46x36-P B1/61-46x36-L


B1/18-LC
B1/18-F

Quality	Finish	art.
Fe	Zn	B1/61-46x36-P
		B1/61-46x36-L

new

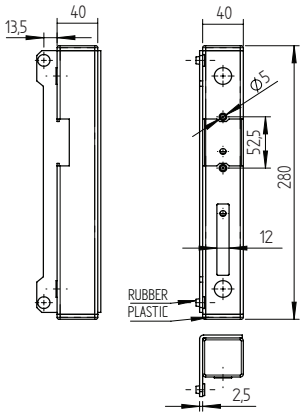


B1/18-LC
B1/18-F

Quality	Finish	art.
Fe	Zn	B1/61U-40

STRIKING BOXES

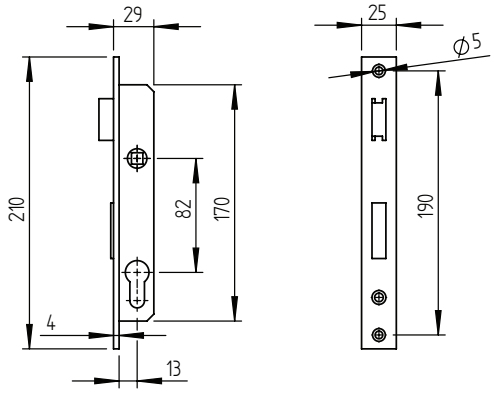

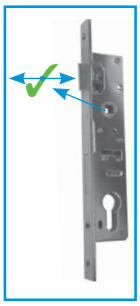

B1/52J-30x30

Quality	Finish	art.
Fe	Zn	B1/30-17x82

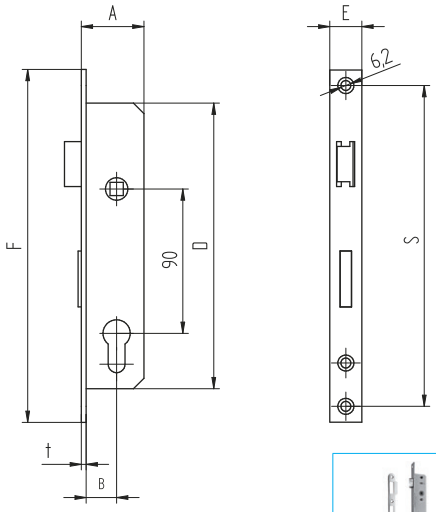

Quality	Finish	art.	A	B	D	E	F	s	t
Fe	Zn	B1/30-22x90	39	19	178	20	220	200	3
		B1/30-25x90	40	22,5	175	22	235	216	2,5
AISI304	satin	B8/30-25x90			180		240	210	
Fe	Zn	B1/30-35x90	50	32,5	177		235	216	
AISI304	satin	B8/30-35x90			180		240	210	

new
top
new

B1/30-22x90	B1/58J-40x40 B8/58J-40x40
B1/30-25x90	-
B1/30-35x90	B1/58J-50x30
B8/30-25x90	-
B8/30-35x90	

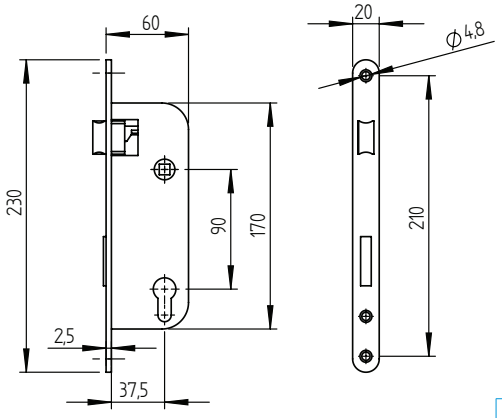

B1/58J-60x40

Quality	Finish	art.
Fe	Zn	B1/30-40x90

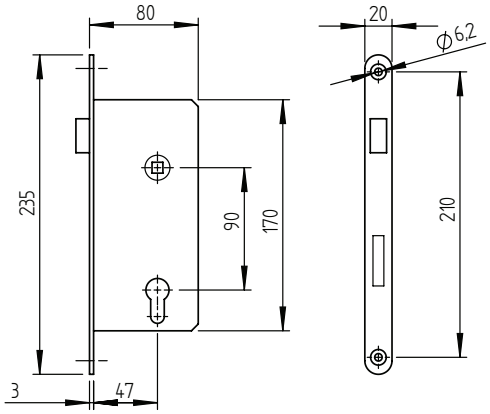

Quality	Finish	art.
Fe	Zn	B1/30-50A

B1/58J-80x40

B1/30-20x85

B8/30-20x85
B8/30-30x85

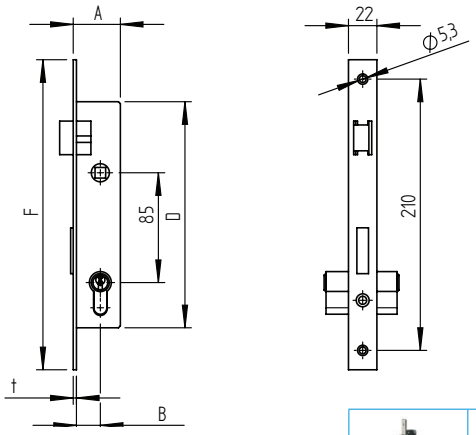

Quality	Finish	art.	A	B	D	F	t
Fe	Zn	B1/30-20x85	36,5	18,5	174	240	2,5
AISI304	satin	B8/30-20x85	35	18	170	238	3
		B8/30-30x85	45	27			

new

B1/30-20x85	B1/39J-40x40 B1/39J-50x30 B8/39J-40x40
B8/30-20x85	B8/39J-40x40-A
B8/30-30x85	-

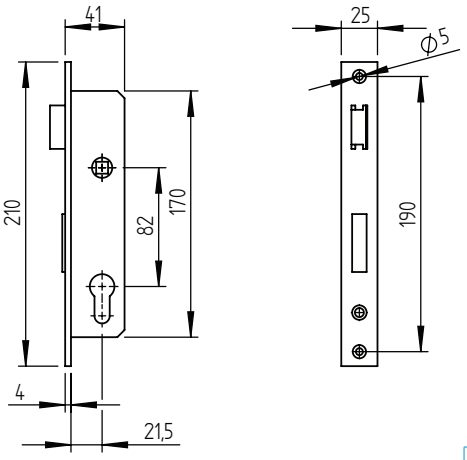

Quality	Finish	art.
Fe	Zn	B1/30-25,5x82

B1/52J-40x40
B1/52J-50x30

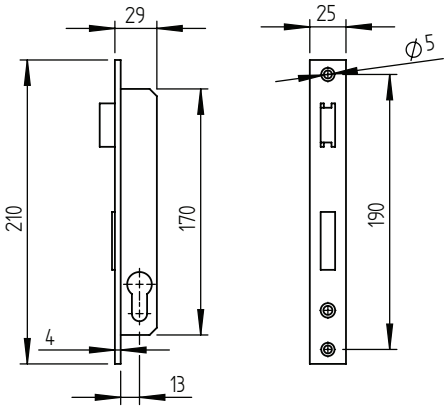

Quality	Finish	art.
Fe	Zn	B1/30-17G

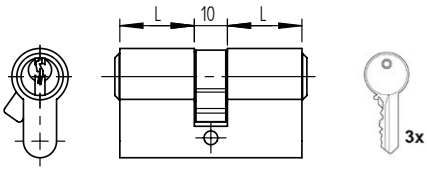

Quality	Finish	art.	L	Color	
BRASS	Ni	B1/19N	22,5	-	
		B1/19N-60	25		
		B1/19N-70	30		
		B1/19N-80	35		new
		B1/19N-R9005	22,5	RAL 9005	new
		B1/19N-60-R9005	25		new
		B1/19N-70-R9005	30		new
		B1/19N-80-R9005	35		new

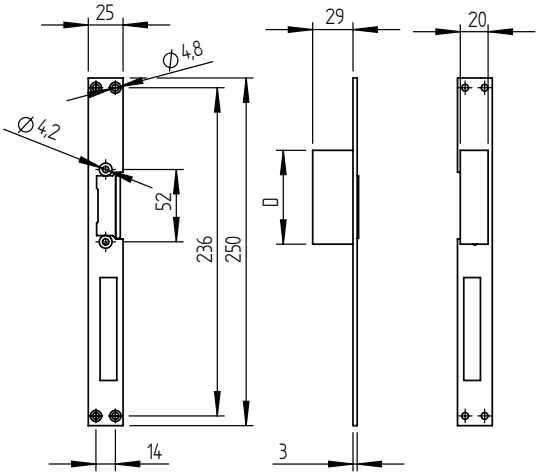

Quality	Finish	art.	D	Power supply	
Fe	Zn	B1/18-I	68	6-14 Vac/Vdc	
AISI304	raw	B8/18-LC		12-24 Vac/Vdc	new
		B8/18-F	79		new

V kludovom stave zablokovany/Locked in default state

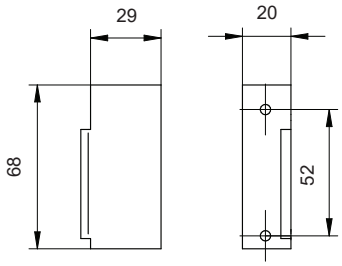

Quality	Finish	art.	Power supply
Fe	Zn	B1/18-LC	12-24 Vac/Vdc

V kľudovom stave zablokovaný/Locked in default state

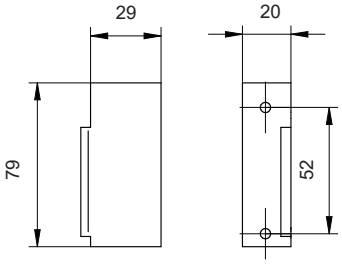

Quality	Finish	art.	Power supply
Fe	Zn	B1/18-F	12-24 Vac/Vdc

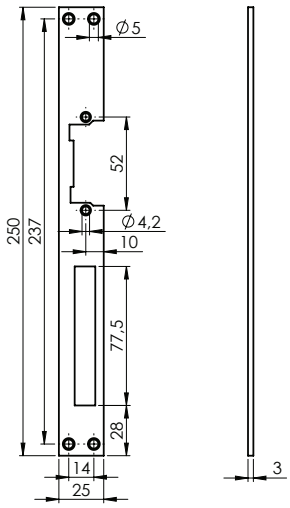

Quality	Finish	art.
AISI304	raw	B8/18-FP

LOCKS

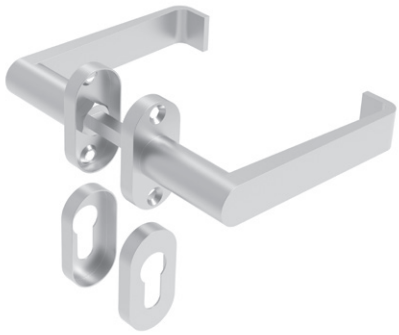

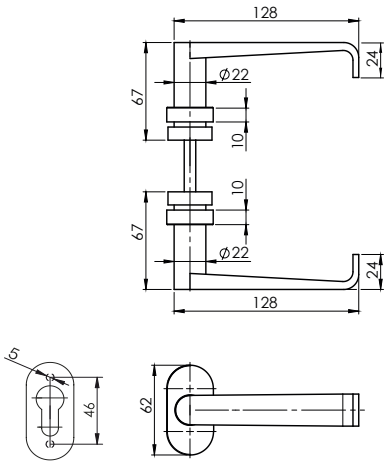

Quality	Finish	art.	Model
AISI304	satin	D8/15-i	K01

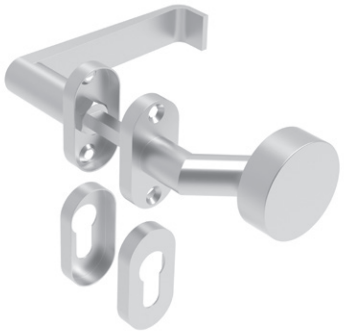

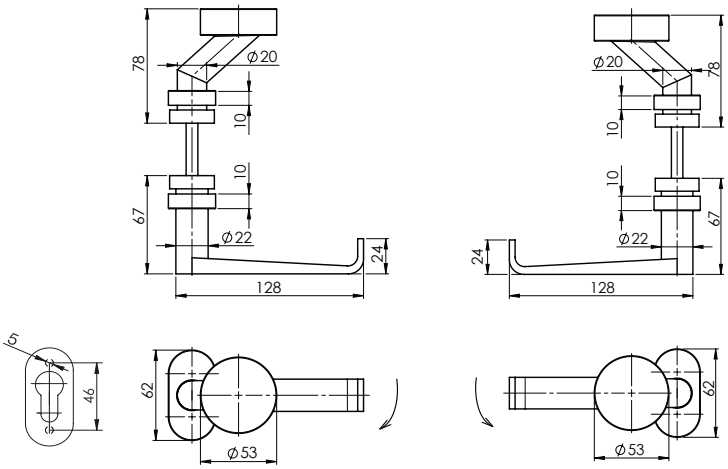

D8/15G-R-i

D8/15G-L-i

Quality	Finish	art.	Orientation	Model
AISI304	satin	D8/15G-R-i	right	K02,K11
		D8/15G-L-i	left	

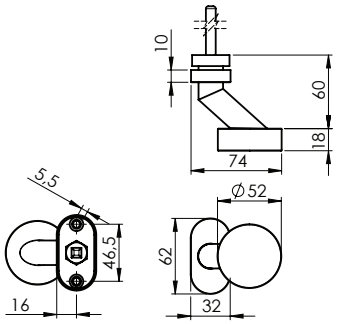

Quality	Finish	art.	Model
AISI304	satin	D8/014-i	K320

D8/09i

D8/09B-i

D8/08i

D8/08B-i

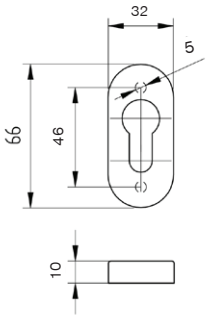

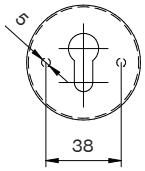

Quality	Finish	art.	Model
AISI304	satin	D8/09-i	K01
		D8/09B-i	
		D8/08-i	
		D8/08B-i	
		D8/08-WC	
		D8/09-WC	

new
new
new

D8/03-i

D8/03-BB

Quality	Finish	Color	art.	Model
AISI304	satin	-	D8/03-i	K02
	RAL	black	D8/03-BLACK	
AISI201	satin	-	D8/03-BB	

new

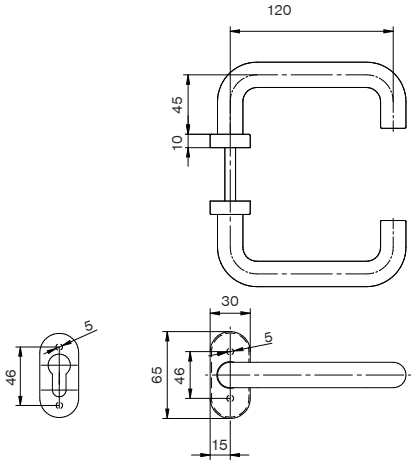

D8/01-i

D8/01-BB

Quality	Finish	art.	Model
AISI304	satin	D8/01-i	K02
AISI201		D8/01-BB	

new

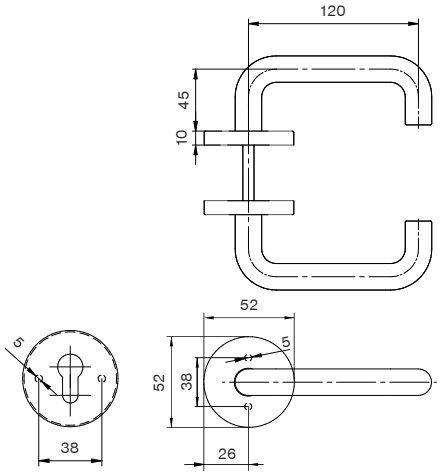

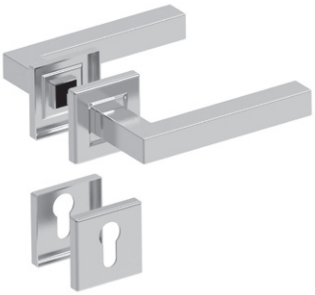

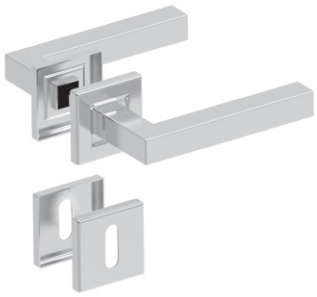

D8/06-i

D8/06-BB

Quality	Finish	art.	Model
AISI304	satin	D8/06-i	K01
AISI201		D8/06-BB	

new

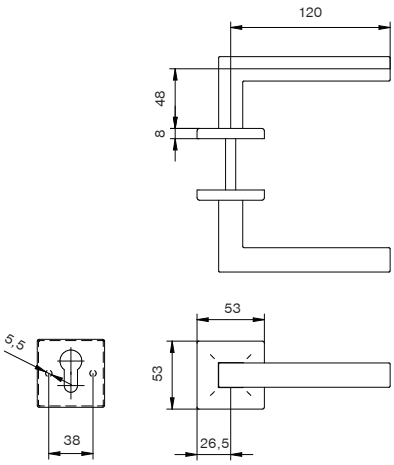

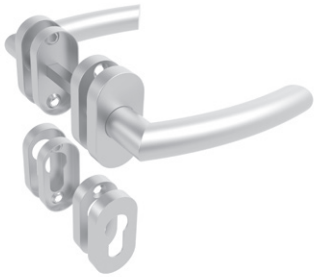

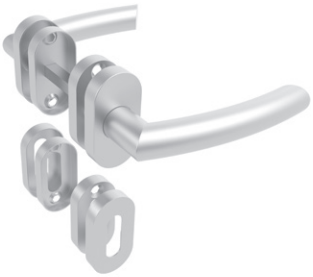

D8/010-i

D8/010-BB

Quality	Finish	art.	Model
AISI304	satin	D8/010-i	K01
AISI201		D8/010-BB	

new

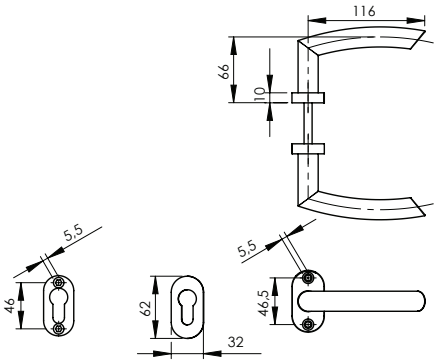

HANDLES

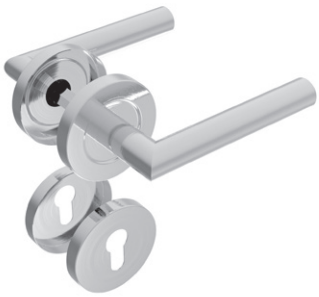

D8/02-i

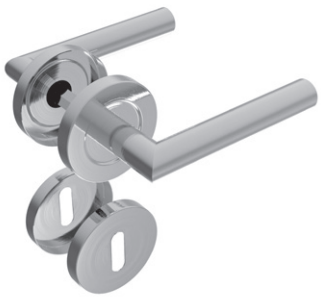

D8/02-BB

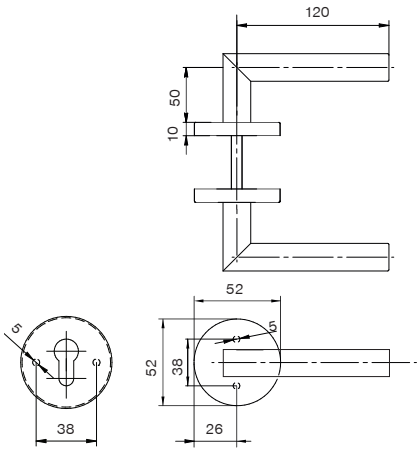

Quality	Finish	art.	Model
AISI304	satin	D8/02-i	K02
AISI201		D8/02-BB	

new

D8/05-i D8/05-BB

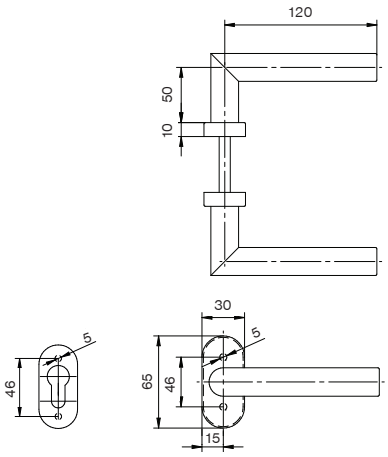

Quality	Finish	Color	art.	Model
AISI304	satin	-	D8/05-i	K02
	RAL	black	D8/05-BLACK	
AISI201	satin	-	D8/05-BB	

new

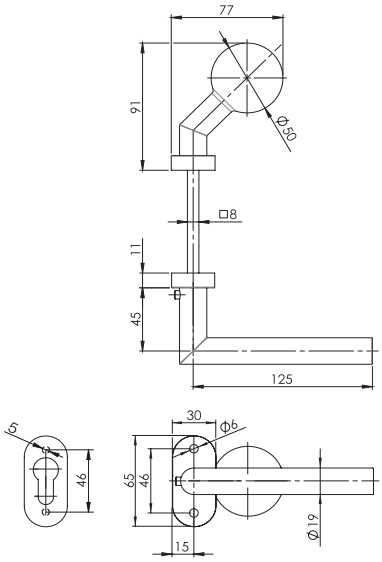

Quality	Finish	art.	Orientation		Model
AISI304	satin	D8/05G-R-i	right	fixed position	K02,K11
		D8/05G-L-i	left		
		D8/05-GR	right	opens together with handle	
		D8/05-GL	left		

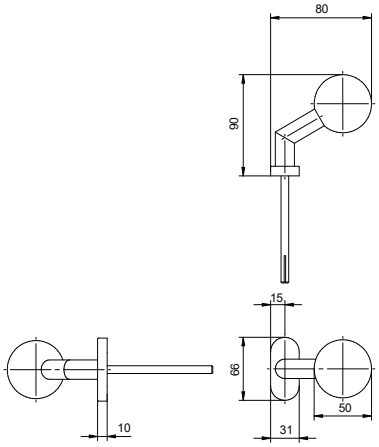

Quality	Finish	Color	art.			Model
AISI304	satin	-	D8/04-i	fix	-	K01
			D8/04-2-i	fix	fix	
			D8/04-2-R-i	open	fix	
			D8/04-2-L-i	fix	open	
			D8/04O-2-i	open	open	
	RAL	black	D8/04-BLACK	fix	-	

new

HANDLES

D2/07-Zn

D2/05T-Zn

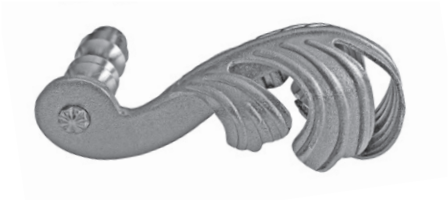

D2/11-Zn

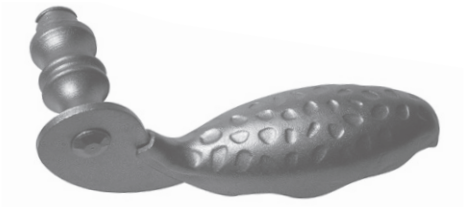

D2/56

D2/34-Zn

D2/57

D2/28-Zn

D2/52-Zn

Quality	Finish	art.	A	B	C	D	X	H	Model
Fe	Zn	D2/07-Zn	145	60	19	17,5	42	12	K11
		D2/11-Zn	132	45	48		28	15	
		D2/34-Zn	152	50	40		34	17	K12
		D2/28-Zn	145	42	37		36		
		D2/05T-Zn	143	60	35		41		
		D2/52-Zn	145	45	35	19	49		K13
	raw	D2/56	150	48	40		37	18	K14
		D2/57	160	54	50		25	19	

top

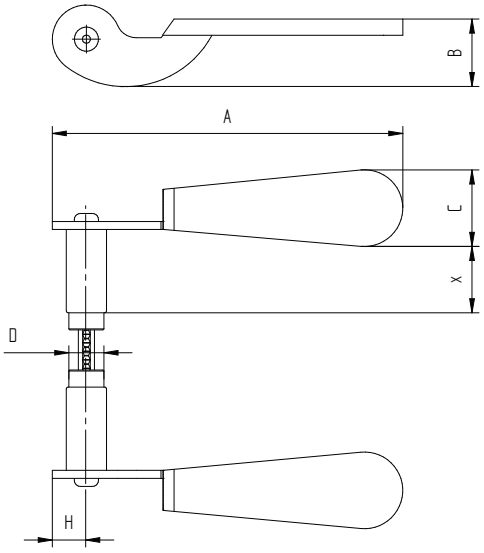

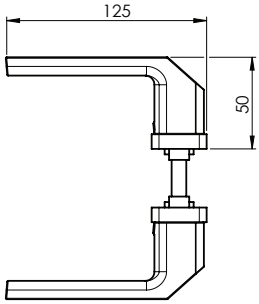

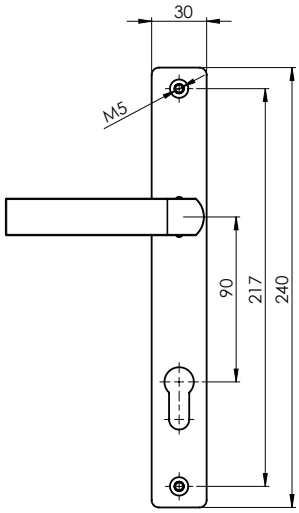

Quality	Finish	Color	art.
ZAMAK	RAL	black	D12/08-90

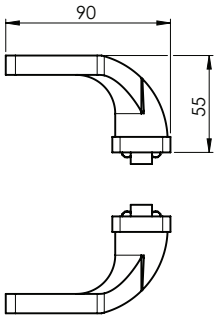

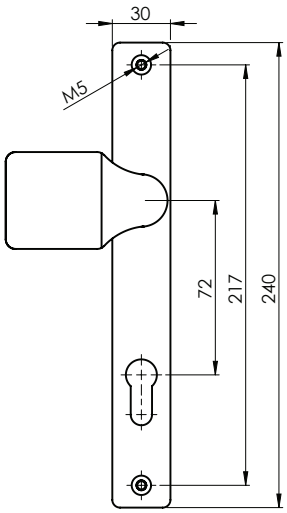

Quality	Finish	Color	art.
ZAMAK	RAL	black	D12/15-90

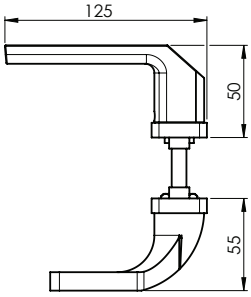

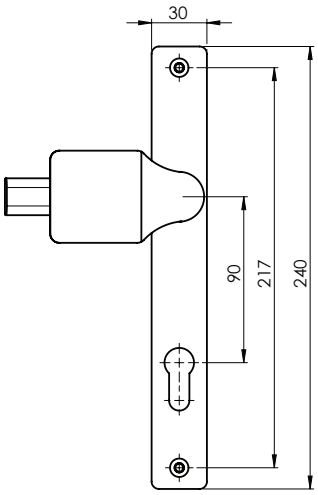

Quality	Finish	Color	art.
ZAMAK	RAL	black	D12/16-90

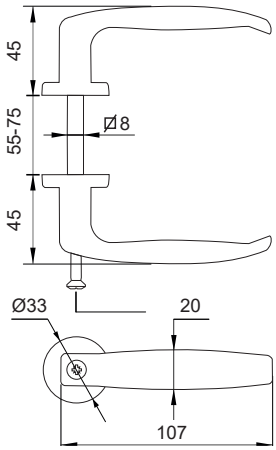

Quality	Finish	Color	art.	Model
ALUMINIUM	RAL	black	D2/29	K03

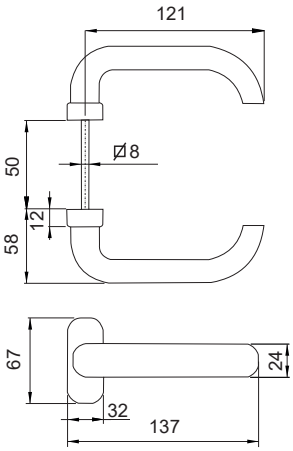

Quality	Finish	art.	Model
PVC	raw	D2/30	K03

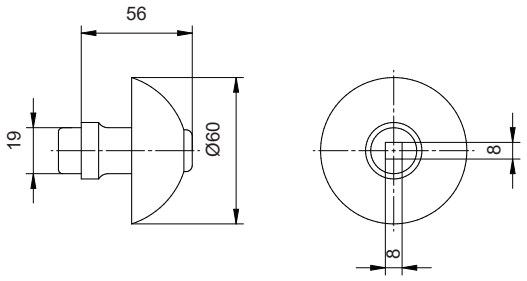

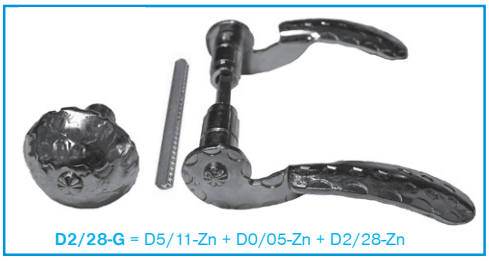

Quality	Finish	art.		Model
Fe	raw	D5/11-Fe	D0/03 D0/05	K12
	Zn	D5/11-Zn		

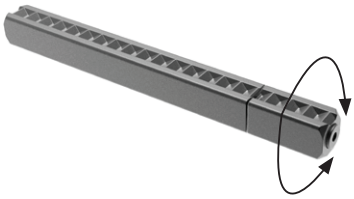

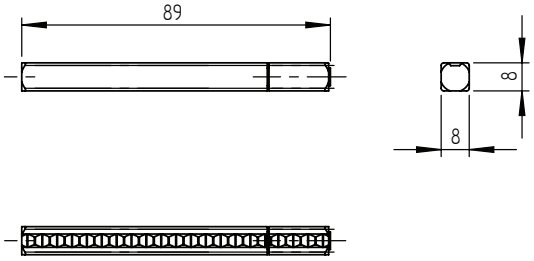

Quality	Finish	art.	
Fe	raw	D0/05-Zn	D5/11...

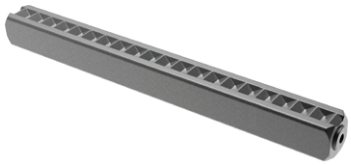

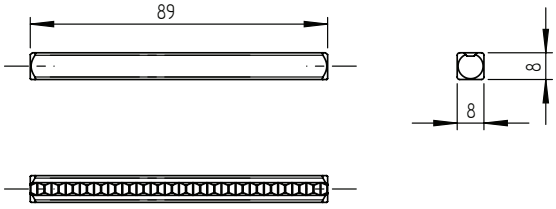

Quality	Finish	art.
Fe	raw	D0/03-Zn

HANDLES

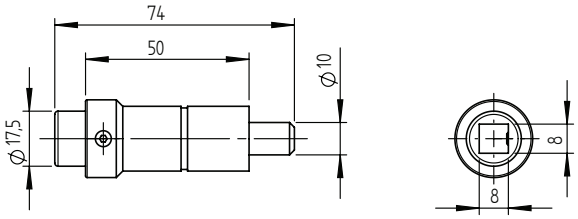

Quality	Finish	art.
Fe	raw	D0/01

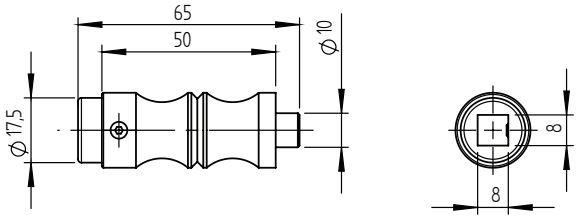

Quality	Finish	art.
Fe	raw	D0/04

D9/10-93x65

D9/10-93x65-INOX

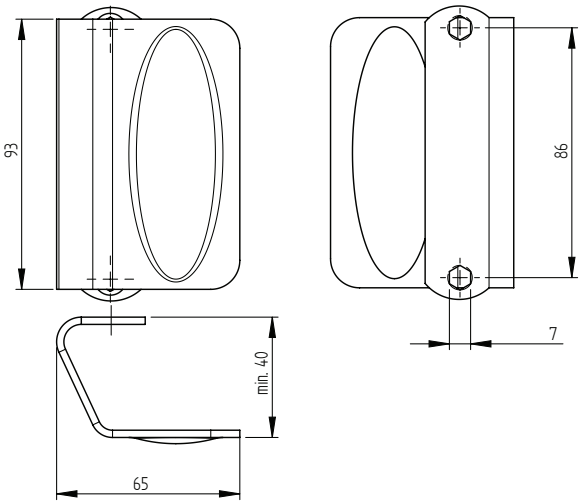

Quality	Finish	art.
Fe	raw	D9/10-93x65
AISI304	satin	D9/10-93x65-INOX

D1/39F

D8/09-i

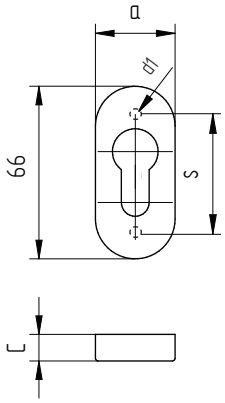

Quality	Finish	Color	art.	a	s	d1	C	Model
PVC	black	-	D1/39F	31	48	3,8	3,5	K02
AISI304	satin		D8/09-i	30	50	5	10	
	RAL	black	D8/09-BLACK					

D1/46K

D1/46F

D8/08-i

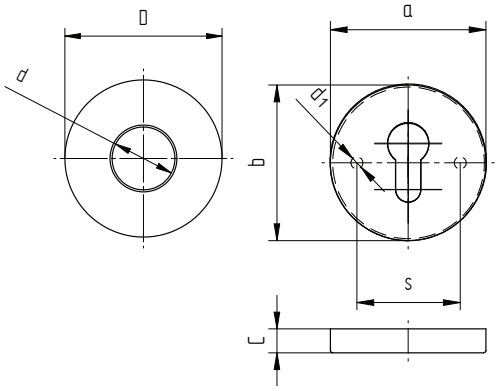

Quality	Finish	art.	a	b	D	s	d	d1	C	Model
Fe	raw	D1/46K	-	-	50	-	21	-	4	K13
		D1/46F								
AISI304	satin	D8/08-i	52	52	-	38	-	5	10	K01

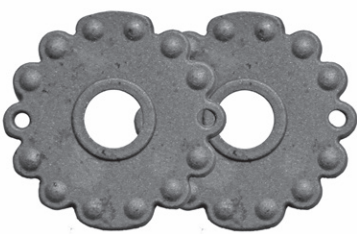

D1/32K

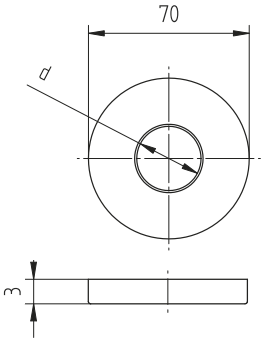

Quality	Finish	art.	d	Model
Fe	raw	D1/32K	18	K11, K12

D1/55-90

D1/18-90

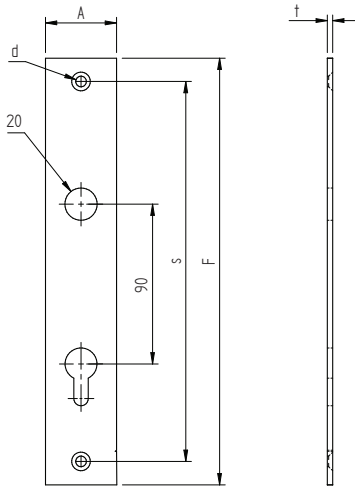

Quality	Finish	art.	A	F	s	d	t	Model
Fe	raw	D1/55-90	60	260	225	5	3	K13
		D1/18-90	47	245	188	5,2	2	

D1/02

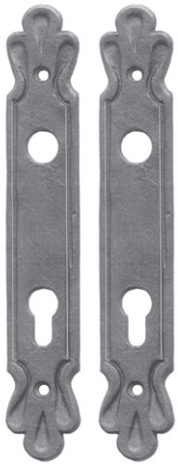

D1/19

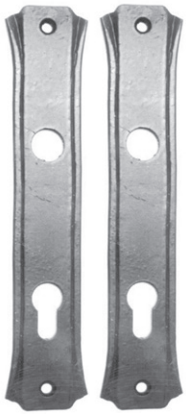

D1/03

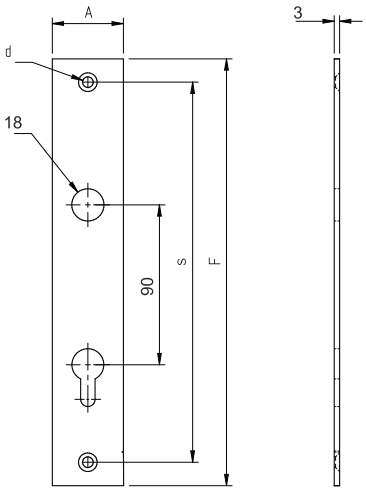

Quality	Finish	art.	A	F	s	d	Model
Fe	Zn	D1/02	40	240	215	5,5	K11, K12
		D1/19	40	278	200	6,5	
		D1/03	50	240	213	6	

top

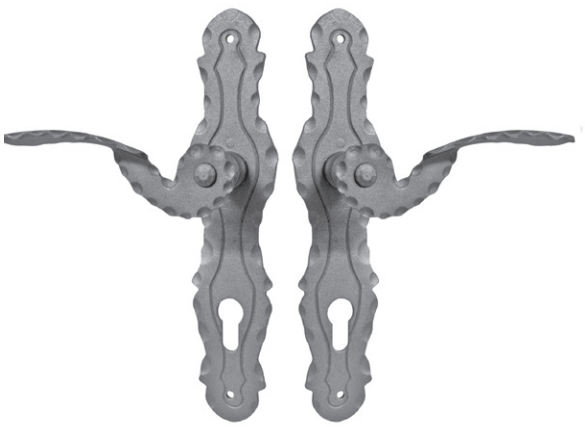

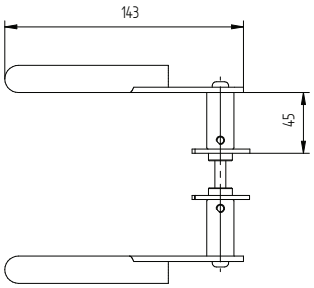

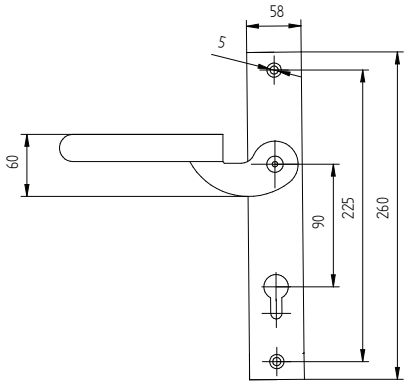

Quality	Finish	art.
Fe	raw	D12/07-90

D1/14AL

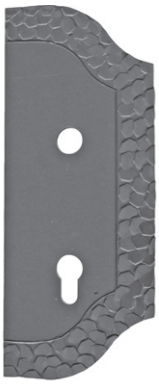

D1/14AR

D1/14A-S

D1/14A-S-T

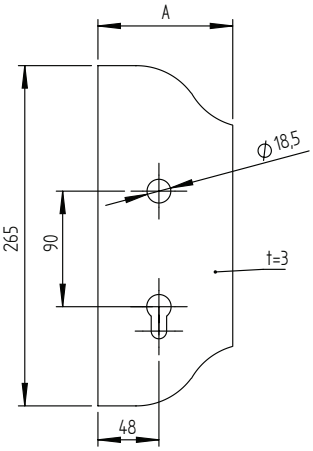

Quality	Finish	art.	A	Model	set
Fe	raw	D1/14AL	105	K01 - K03 K11, K12 K21 - K23	BR/30x30-set S BR/30x30-set ES
		D1/14AR			
		D1/14A-S		-	-
		D1/14A-S-T	110		

top
top

D1/14AL-T90

D1/14AR-T90

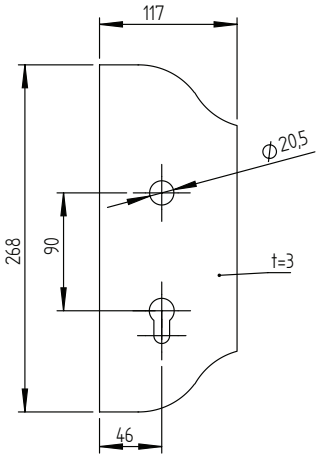

Quality	Finish	art.	Model
Fe	raw	D1/14AL-T90	K01 - K03 K13 K21 - K23
		D1/14AR-T90	

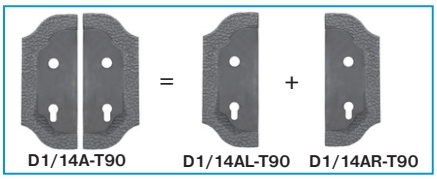

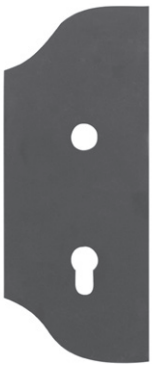

D1/14H2
D1/14H3

D1/14H3-S

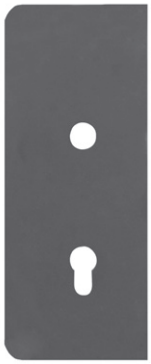

D1/65H2

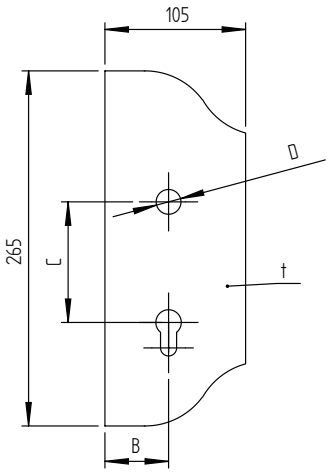

Quality	Finish	art.	B	C	D	t	Model
Fe	raw	D1/14H3	48	90	19	3	K01-K03, K11, K12, K21 - K23
		D1/14H3-S	-	-	-		-
		D1/65H2	48	90	18,5	2	K01 - K03, K11, K12, K21

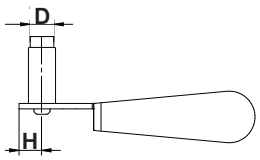

		D	-	-	-	D17	D17	D19	D19	-	19	D19,5
		Hmax	26	15	18	15	17	17	19	15	30	35
		Model	K01	K02	K03	K11	K12	K13	K14	K21	K22	K23
 set	BR/30x30-set (E)					✓						
	BR/30x30-set S(E)					✓	✓					
	BR/50x30-set (E)					✓	✓					
	BR/40x40-set (E)		✓	✓	✓	✓	✓			✓		✓
	BR/60x40-set (E)		✓	✓	✓	✓	✓			✓		✓
	BR/80x40-set (E)		✓	✓	✓	✓	✓			✓		✓
 	B1/52J-30x30					✓						
	B1/39J-50x30			✓		✓				✓		
	B1/52J-50x30			✓	✓	✓	✓			✓		
	B1/58J-50x30		✓	✓	✓	✓	✓			✓		
	B1/39J-40x40, B8/58J-40x40			✓		✓				✓		
	B1/58J-40x40			✓		✓				✓		
	B1/52J-40x40			✓	✓	✓	✓			✓		
	B1/60-40x40			✓	✓	✓	✓			✓		
	B1/58J-60x40		✓	✓	✓	✓	✓			✓		
	B1/59-60x40		✓	✓	✓	✓	✓			✓		
	B1/58J-80x40		✓	✓	✓	✓	✓			✓		✓
	B1/48-80x40		✓	✓	✓	✓	✓			✓		✓
	D1/14AL, D1/14AR		✓	✓	✓	✓	✓			✓	✓	✓
	D1/14H2, D1/14H3		✓	✓	✓	✓	✓			✓	✓	✓
	D1/14AL-T90, D1/14AR-T90		✓	✓	✓			✓	✓	✓	✓	✓
	D1/34-L-t2, D1/34-R-t2		✓	✓	✓			✓	✓	✓	✓	✓
	D1/35-L-90, D1/35-R-90		✓	✓	✓			✓	✓	✓	✓	✓
 	D1/39F			✓								
	D8/09-i			✓								
	D1/46K, D1/46F							✓	✓		✓	
	D8/08-i		✓									
	D1/32K, D1/32F					✓	✓					
	D1/55-90							✓	✓		✓	
	D1/18-90							✓	✓		✓	
	D1/02					✓	✓					
	D1/03					✓	✓					
	D1/19					✓	✓					

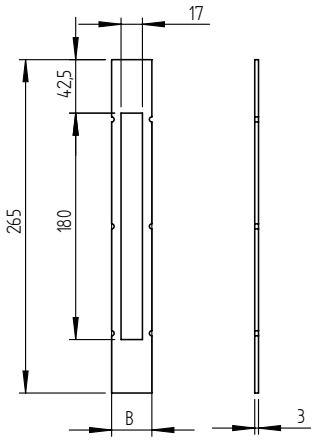

Quality	Finish	art.	B
Fe	raw	B1/34-32A	32
		B1/34-42A	42

B1/34-32A	B1/30-50...	D1/14...	B1/33-30
B1/34-42A			B1/33-40

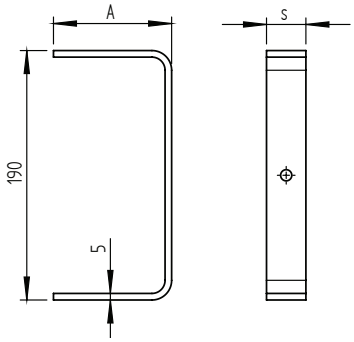

Quality	Finish	art.	A	s
Fe	raw	B1/33-30	90	30
		B1/33-40	85	40

B1/33-30	B1/30-50...	D1/14...	B1/34-32A
B1/33-40			B1/34-42A

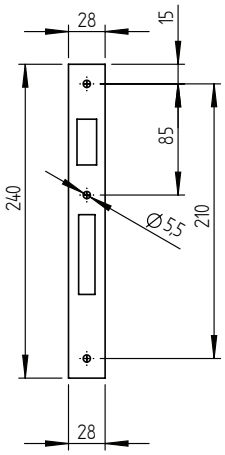

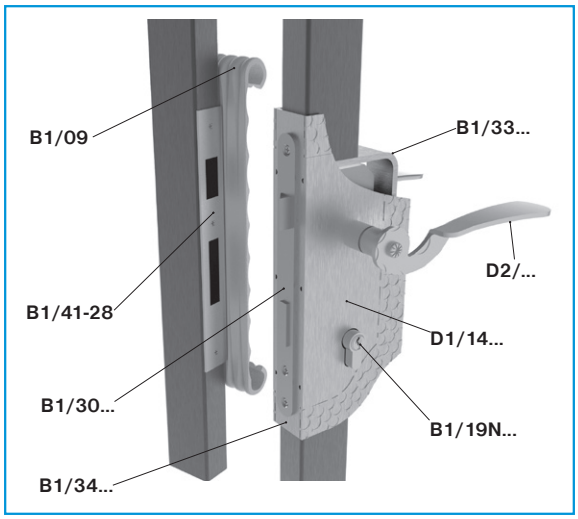

Quality	Finish	art.
Fe	raw	B1/41-28
AISI304	satin	B8/41-28

new

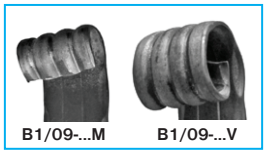

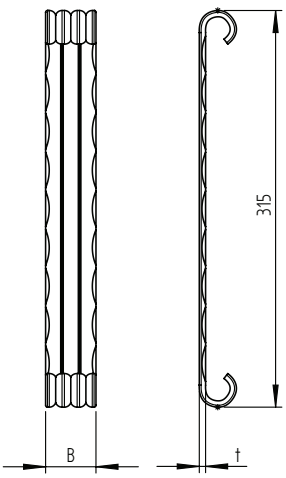

Quality	Finish	art.	B	t
Fe	raw	B1/09-40M	40	5
		B1/09-40V		
		B1/09-50M	50	
		B1/09-50V		3

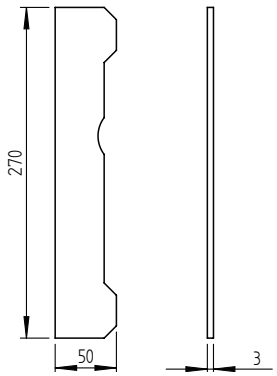

Quality	Finish	art.
Fe	raw	B1/09-50H
AISI304	raw	B8/09-50H

B1/07T...
B8/07T...

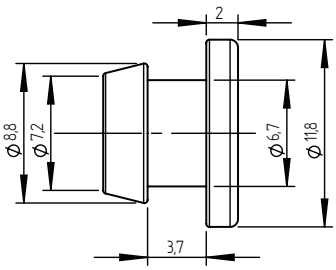

Quality	Finish	art.
Rubber	black	B1/64G

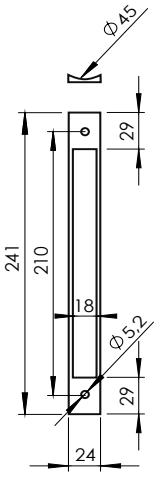

Quality	Finish	art.
PVC	black	B1/65

new

6

- **HLINÍKOVÉ BRÁNY**
  ALUMINIUM GATES

- **PRÍSLUŠENSTVO**
  ACCESSORIES

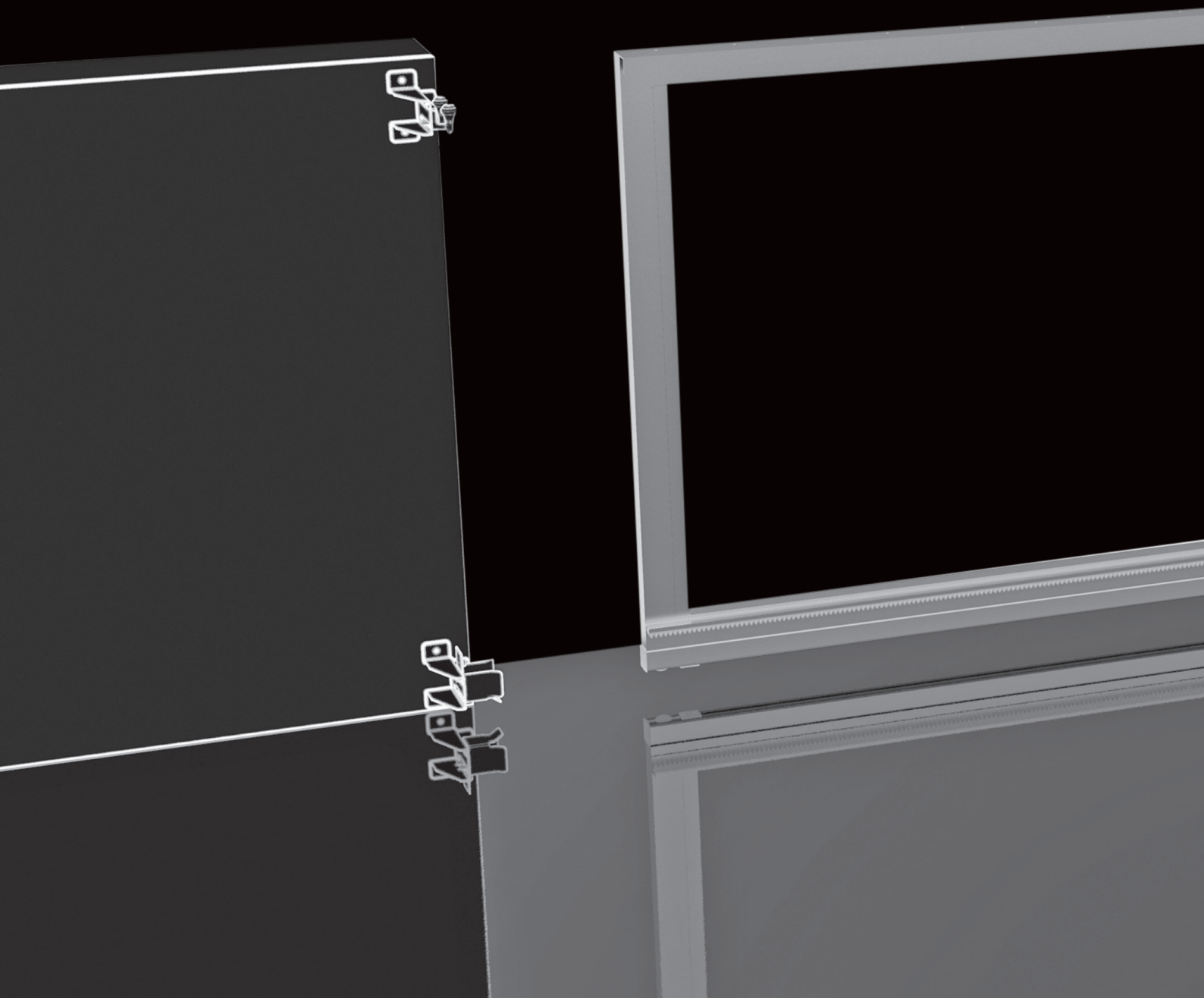

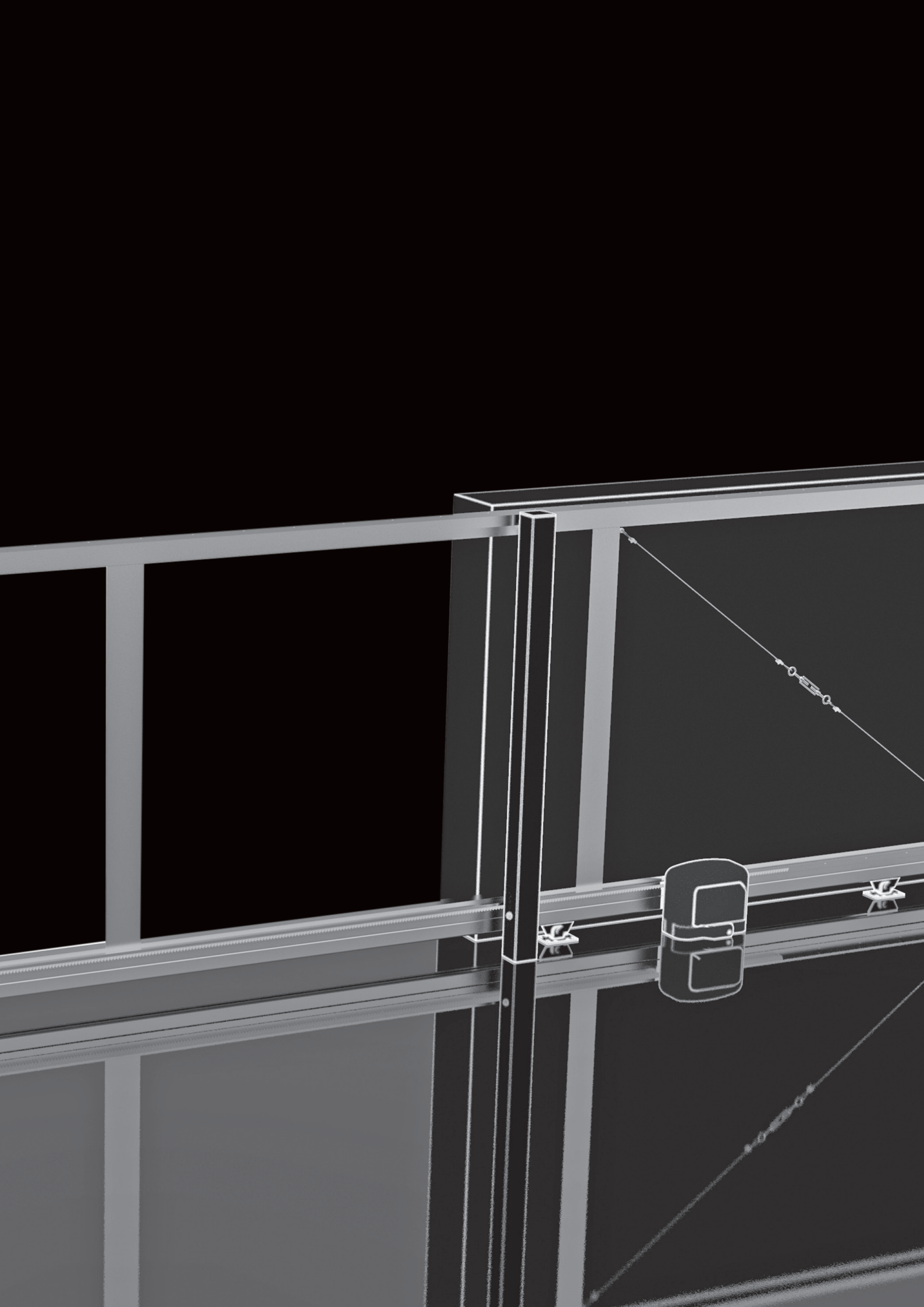

MODEL AI 90x95 L4m/G≤200kg					
	H/34-4-90x95-NYLON	H/14N-90x95-NYLON	H/15P-100	H/40-90x95P	H/02-90x95-AL-6000
SV-90x95-AL-ECO	2x	1x	1x	2x	-
SV-90x95-AL	2x	1x	1x	2x	1x

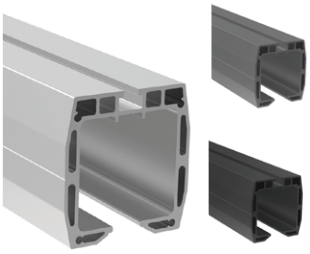

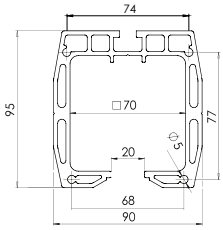

Quality	Finish	art.	Color	L	
ALUMINIUM	natural	H/02-90x95-AL-6000	-	6000	new
		H/02-90x95-AL-R9005-6000	RAL 9005		new
		H/02-90x95-AL-R7016-6000	RAL 7016		new

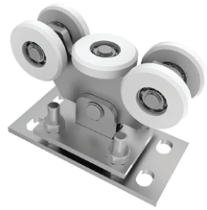

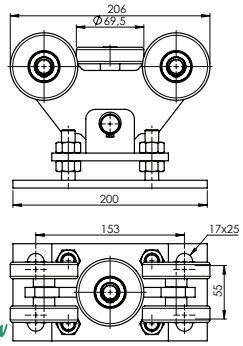

Quality	Finish	art.	
Fe	Zn	H/34-4-90x95-NYLON	new

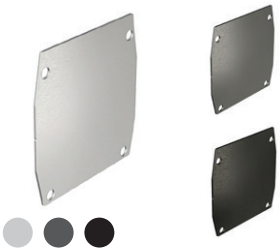

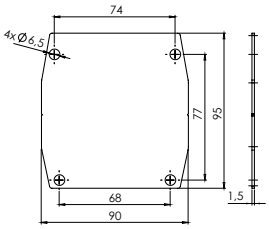

Quality	Finish	art.	Color	
Fe	Zn	H/40-90x95P	-	new
		H/40-90x95P-R9005	RAL 9005	new
		H/40-90x95P-R7016	RAL 7016	new

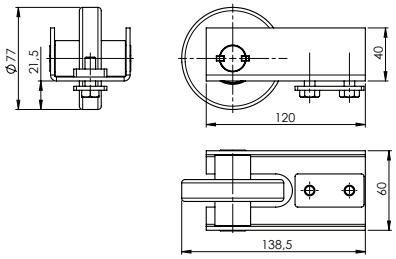

Quality	Finish	art.	
Fe	Zn	H/14N-90x95-NYLON	new

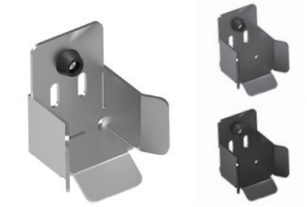

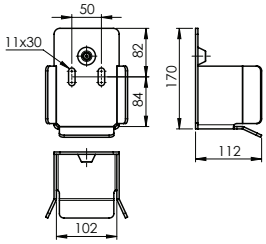

Quality	Finish	art.	Color	A	B	h	s	H	
Fe	Zn	H/15P-100	-	170	108	65	50	108	
		H/15P-100-R9005	RAL 9005						new
		H/15P-100-R7016	RAL 7016						new
AISI304	raw	H8/15P-100	-						new

MODEL Al 90x99 L4m/G≤200kg		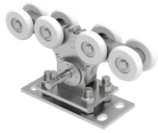				
	H/34B-4-90x99-NYLON	H/34B-4G-90x99-NYLON	H8/14N-90x95	H8/15P-100	H8/40-90x99P	H/02-90x99-AL-6000
SV-90x99-AL-ECO	1x	1x	1x	1x	2x	-
SV-90x99-AL	1x	1x	1x	1x	2x	1x

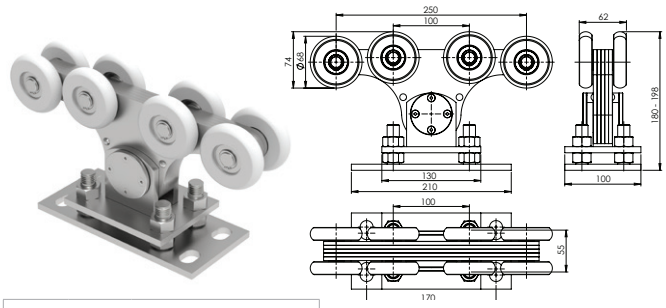

Quality	Finish	art.
Fe	Zn	H/34B-4-90x99-NYLON

new

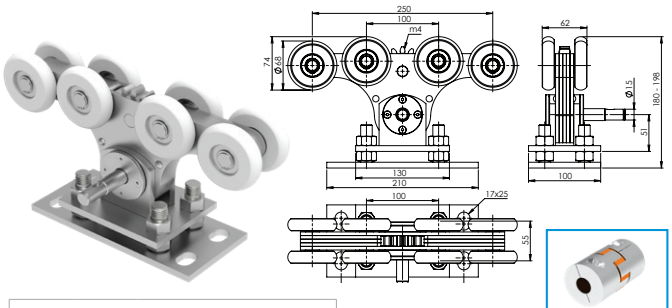

Quality	Finish	art.
Fe	Zn	H/34B-4G-90x99-NYLON

new

H/66-15x25

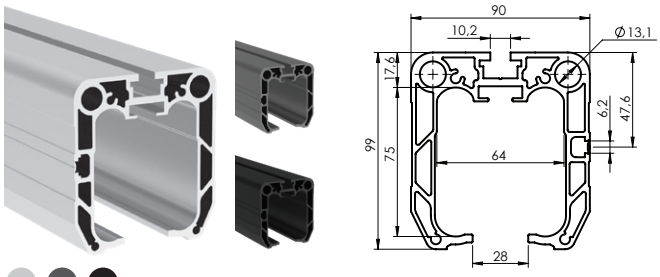

Quality	Finish	art.	Color	L	
ALUMINIUM	natural	H/02-90x99-AL-6000	-		new
		H/02-90x99-AL-R9005-6000	RAL 9005	6000	new
		H/02-90x99-AL-R7016-6000	RAL 7016		new
		H/02-90x99-AL-7000	-		new
		H/02-90x99-AL-R9005-7000	RAL 9005	7000	new
		H/02-90x99-AL-R7016-7000	RAL 7016		new

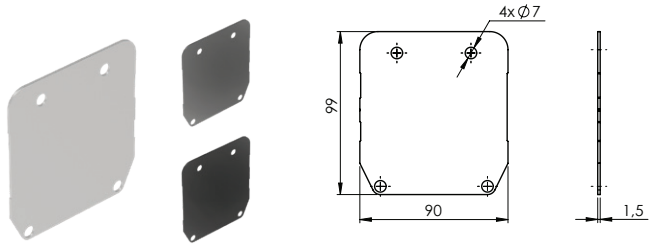

Quality	Finish	art.	Color	
AISI304	raw	H8/40-90x99P	-	new
		H8/40-90x99P-R9005	RAL 9005	new
		H8/40-90x99P-R7016	RAL 7016	new

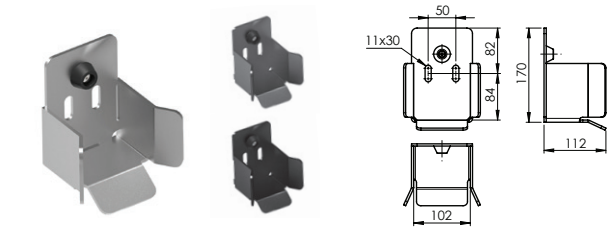

Quality	Finish	art.	Color	A	B	h	s	H	
Fe	Zn	H/15P-100	-	170	108	65	50	108	new
		H/15P-100-R9005	RAL 9005						new
		H/15P-100-R7016	RAL 7016						new
AISI304	raw	H8/15P-100	-						new

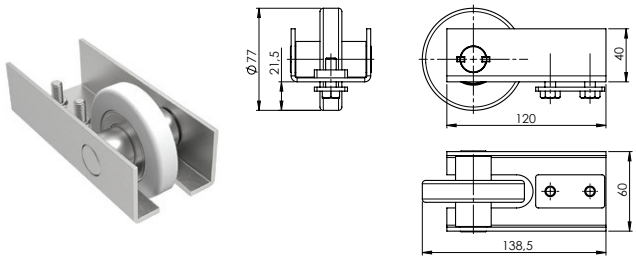

Quality	Finish	art.
AISI304	raw	H8/14N-90x99-NYLON

new

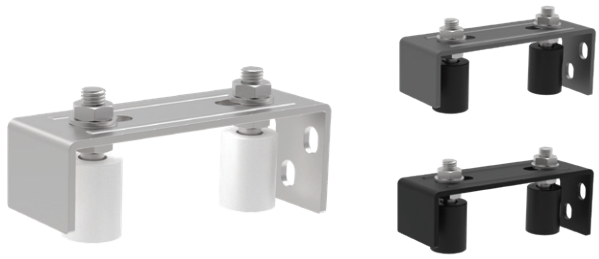

Quality	Finish	art.	Color	
Fe	Zn	H/12-2S	-	top
		H/12-2S-R9005	RAL 9005	new
		H/12-2S-R7016	RAL 7016	new
AISI304	raw	H8/12-2S	-	

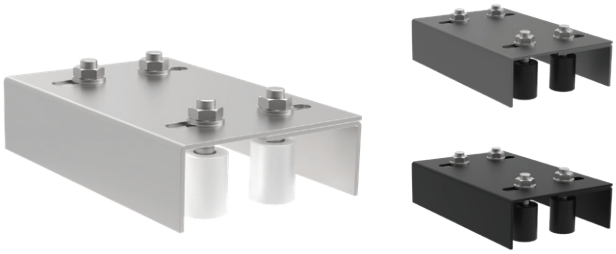

Quality	Finish	art.	Color	
Fe	Zn	H/12-4T	-	
		H/12-4T-R9005	RAL 9005	new
		H/12-4T-R7016	RAL 7016	new
AISI304	raw	H8/12-4T	-	

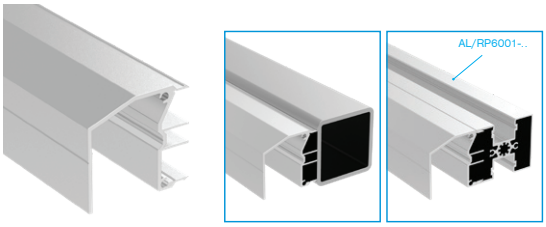

Quality	Finish	art.	
ALUMINIUM	natural	AL/RP-6005-6000-N	H8/04-32-W, H8/04L-35

new

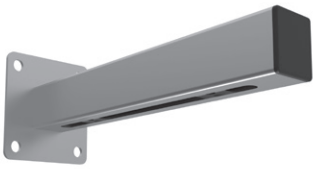

Quality	Finish	art.
Fe	Zn	H/52-40x40
AISI304	raw	H8/52-40x40

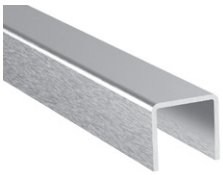

Quality	Finish	art.	bxh	t	L	
AISI304	raw	A/6900-024-2500	28x26	2	2500	H8/04-22-W
		A/6900-024-5000			5000	
		A/U40x40x3-3000	40x40	3	3000	H/04-30... H/04-32-W H8/04-32-W
		A/U40x40x3-6000			6000	
Fe		U/40x40x3-3000			3000	
		U/40x40x3-6000			6000	
ALUMINIUM	natural	AL/U40x40x3-6000				
AISI304	raw	A/U50x50x3-3000	50x50		3000	H/04-42... H/04G-43 H/04L-42
		A/U50x50x3-6000			6000	
Fe		U/50x50x3-3000			3000	
		U/50x50x3-6000			6000	
ALUMINIUM	natural	AL/U50x50x3-6000				

new
new
new
new
new
new

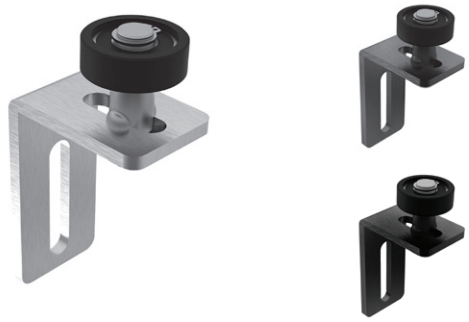

Quality	Finish	art.	Color	
Fe	Zn	H/53	-	top
		H/53-R9005	RAL 9005	new
		H/53-R7016	RAL 7016	new
AISI304	raw	H8/53	-	

Quality	Finish	art.
AISI304	raw	H8/04-22-W

Quality	Finish	art.	
Fe	Zn	H/04G-43	top
AISI304	raw	H8/04G-43	new

Quality	Finish	art.	
Fe	Zn	H/04L-35	
AISI304	raw	H8/04L-35	new

Quality	Finish	art.	Color
Fe	Zn	H/37-60P	-
		H/37-60P-R9005	RAL 9005
		H/37-60P-R7016	RAL 7016
AISI304	raw	H8/37-60P	-

new
new

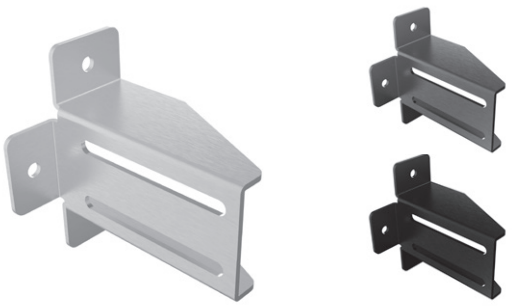

Quality	Finish	art.	Color
Fe	Zn	H/16-46x130	-
		H/16-46x130-R9005	RAL 9005
		H/16-46x130-R7016	RAL 7016
AISI304	raw	H8/16-46x130	-

new
new

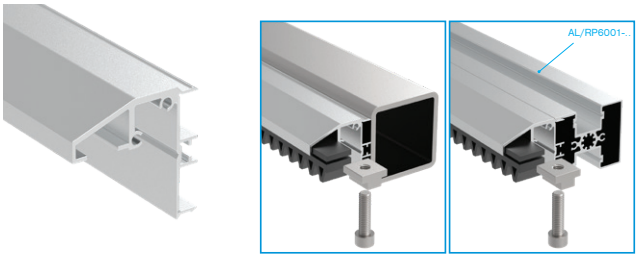

Quality	Finish	art.
ALUMINIUM	natural	AL/RP-6004-6000-N

new

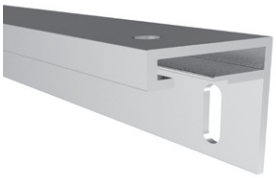

Quality	Finish	art.
ALUMINIUM	natural	H/01PVC-AL-K

Quality	Finish	art.	Color
Fe	Zn	H/10B-60x130	-
		H/10B-60x130-R9005	RAL 9005
		H/10B-60x130-R7016	RAL 7016
AISI304	raw	H8/10B-60x130	-

new
new

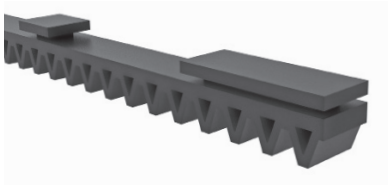

Quality	Finish	art.	Gmax (kg)
NYLON	raw	H/01PVC-AL	300

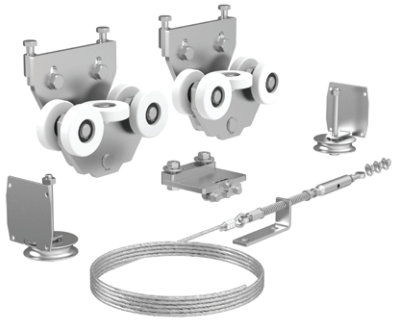

Quality	Finish	art.	max L
Fe	Zn	TS-C2-8-AL	8000

new

art.	G max	G opt
ROAD400-ZKIT	400kg	200kg


ANCORA
CHEMISCHE
FIXING
GEBOFIX
PRO
410 ml.
OK LOCK
SUPERFAST GLUE 20g
WS-Edelstahl
Pflege-Spray
• Edelstahlpflege für matte und polierte Oberflächen
• wirkt Wiederverschmutzung entgegen
• Nettoyant acier inoxydable pour surfaces mattes et polies
• Repousse le retour de la saleté
• RVS-reiniger voor matte en gepolijste oppervlakken
• Gaat terugkerende vervuiling tegen
• High-grade steel maintain-spray for matte and polished surfaces
• Provides recontamination
WbS
CLEANER
for stainless railings
500ml


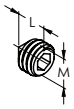

Quality	Finish	art.	M	L
AISI304	raw	A-DIN 914-A2 M5x5	5	5
		A-DIN 914-A2 M5x6		6
		A-DIN 914-A2 M5x8		8
		A-DIN 914-A2 M6x6	6	6
AISI316		A4-DIN 914 M5x5	5	5


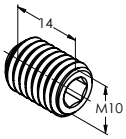

Quality	Finish	art.
AISI304	raw	A-DIN 916-A2 M10x14
AISI316		A4-DIN 916 M10x14


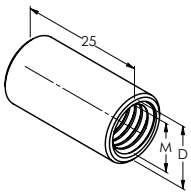

Quality	Finish	art.	M	D
AISI304	raw	A-DIN 6334V M8x25-A2	8	11
		A-DIN 6334V M10x25-A2	10	13


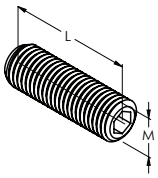

Quality	Finish	art.	M	L
AISI304	raw	A-DIN 913-A2 M5x10	5	10
		A-DIN 913-A2 M6x10	6	
		A-DIN 913-A2 M6x12		12
		A-DIN 913-A2 M8x16	8	16
		A-DIN 913-A2 M8x20		20
		A-DIN 913-A2 M8x25		25
		A-DIN 913-A2 M8x30		30
		A-DIN 913-A2 M8x40		40
		A-DIN 913-A2 M8x80		80
		A-DIN 913-A2 M10x12	10	12
		A-DIN 913-A2 M10x35		35
		A-DIN 913-A2 M10x100		100
AISI316		A4-DIN 913 M5x5	5	5
		A4-DIN 913 M5x10		10
		A4-DIN 913 M6x10	6	
		A4-DIN 913 M6x12		12
		A4-DIN 913 M10x12	10	
		A4-DIN 913 M10x16		16
		A4-DIN 913 M10x55		55


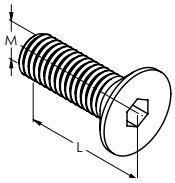

Quality	Finish	art.	M	L	
steel 8.8	Zn	DIN 7991 M8x20-Zn	8	20	
		DIN 7991 M12x30-Zn	12	30	
AISI304	raw	A-DIN 7991-A2 M5x12	5	12	
		A-DIN 7991-A2 M5x16		16	
		A-DIN 7991-A2 M5x20		20	
		A-DIN 7991-A2 M6x8	6	8	
		A-DIN 7991-A2 M6x14		14	
		A-DIN 7991-A2 M6x16		16	
		A-DIN 7991-A2 M6x20		20	
		A-DIN 7991-A2 M6x40		40	
		A-DIN 7991-A2 M6x60		60	
		A-DIN 7991-A2 M8x12	8	12	
		A-DIN 7991-A2 M8x16		16	
		A-DIN 7991-A2 M8x30		30	
		A-DIN 7991-A2 M8x35		35	
		A-DIN 7991-A2 M8x50		50	new
		A-DIN 7991-A2 M8x70		70	
		A-DIN 7991-A2 M8x80		80	new
		A-DIN 7991-A2 M10x35	10	35	new
AISI316		A4-DIN 7991 M5x16	5	16	
		A4-DIN 7991 M6x14	6	14	
		A4-DIN 7991 M6x40		40	
		A4-DIN 7991 M8x20	8	20	
		A4-DIN 7991 M8x30		30	
		A4-DIN 7991 M8x70		70	
		A4-DIN 7991 M8x100		100	new
		A4-DIN 7991 M10x20	10	20	
		A4-DIN 7991 M12x30	12	30	


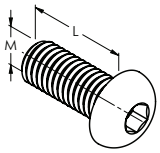

Quality	Finish	art.	M	L
steel 8.8	Zn	DIN 7380 M10x20 8.8-Zn	10	20
AISI304	raw	A-DIN 7380-A2 M5x12	5	12
		A-DIN 7380-A2 M6x12	6	
		A-DIN 7380-A2 M8x10	8	10
		A-DIN 7380-A2 M8x12		12
		A-DIN 7380-A2 M8x20		20
		A-DIN 7380-A2 M10x20	10	
		A-DIN 7380-A2 M12x20	12	
AISI316		A4-DIN 7380 M5x12	5	12
		A4-DIN 7380 M5x16		16
		A4-DIN 7380 M6x12	6	12
		A4-DIN 7380 M8x20	8	20
		A4-DIN 7380 M10x20	10	


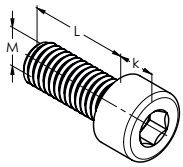

Quality	Finish	art.	M	L	k	
AISI304	raw	A-DIN 912-A2 M5x20	5	20	5	
		A-DIN 912-A2 M8x20	8		8	
		A-DIN 912-A2 M10x45	10	45	10	new
		A-DIN 912-A2 M12x25	12	25	12	
		A-DIN 912-A2 M12x35		35	12	
AISI316		A4-DIN 7984 M8x12	8	12	5	new

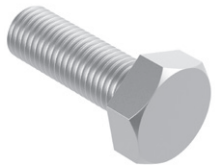

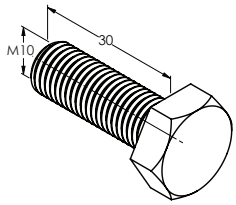

Quality	Finish	art.
steel 8.8	Zn	DIN 933 M10x30 8.8-Zn
AISI316	raw	A4-DIN 933 M10x30

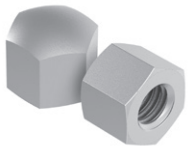

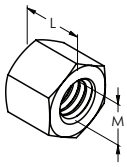

Quality	Finish	art.	M	L
AISI304	raw	A-DIN 917 M8	8	10
		A-DIN 917 M10	10	12

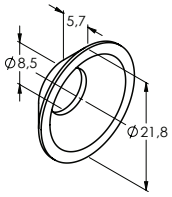

Quality	Finish	art.
AISI316	raw	A14/08-WASHER

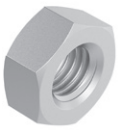

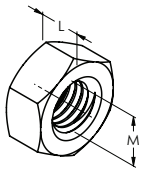

Quality	Finish	art.	M	L
AISI304	raw	A-DIN 439B-A2 M8	8	4
		A-DIN 934 M8		6,5
		A-DIN 934 M10	10	8
		A-DIN 934 M12	12	10
		A-DIN 934 M16	16	13
AISI316		A4-DIN 439B M8	8	4
		A4-DIN 934 M10	10	8

new

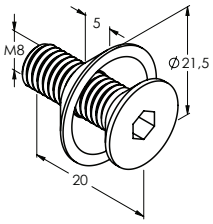

Quality	Finish	art.
steel 8.8	Zn	W-DIN 7991 M8x20-P
AISI316	raw	W-DIN 7991-A4 M8x20-P

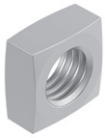

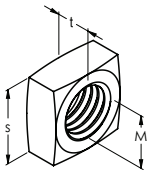

Quality	Finish	art.	M	s	t
AISI304	raw	A-DIN 562 M6	6	10	3,2
		A-DIN 562 M8	8	13	4
		A-DIN 562 M10	10	17	5

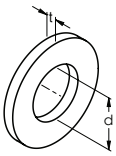

Quality	Finish	art.	D	d	t
steel	Zn	DIN 125 10-Zn	20	10	2
		DIN 9021 10-Zn	30		2,5
		WIT-SHB M8-Zn	23	9	5
		WIT-SHB M10-Zn	26	12	
		WIT-SHB M12-Zn	28	14	
AISI304	raw	A-DIN 125-A2 M5	10	5	1
		A-DIN 9021-A2 M8	30	8	2,5
		A-DIN 125-A2 M8	16		1,6
		A-DIN 125-A2 M10	20	10	2
		A-DIN 125-A2 M12	24	12	2,5
		A-DIN 433-A2 M12	20		2
AISI316		A4-DIN 9021 M8	24	8,4	
		A4-DIN 9021 M16	50	17	2,5
		A4-WIT-SHB M8	23	9	5
		A4-WIT-SHB M10	26	12	
		A4-WIT-SHB M12	28	14	

new

new

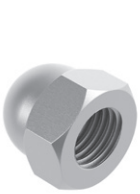

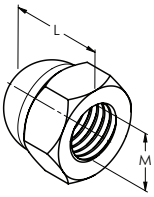

Quality	Finish	art.	M	L
AISI304	raw	A-DIN 1587-A2 M6	6	12
		A-DIN 1587-A2 M8	8	15
		A-DIN 1587-A2 M10	10	18
		A-DIN 1587-A2 M12	12	22
AISI316		A4-DIN 1587 M10	10	18

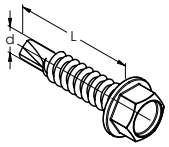

Quality	Finish	art.	d	L
AISI304	raw	A-DIN 7504K 5,5x25	5,5	25

new

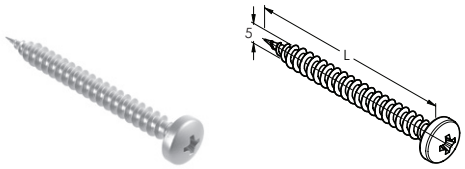

Quality	Finish	art.9	L
AISI304	raw	A-PH 5x20	20
		A-PH 5x35	35

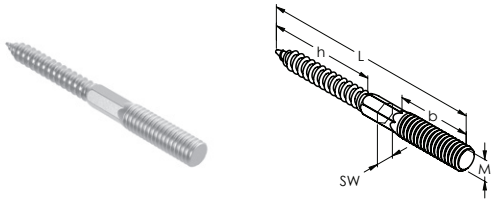

Quality	Finish	art.	M	L	b	h	SW
AISI304	raw	A-DIN 9210 M6x60-A2	6	60	20	37	-
		A-DIN 9210 M8x60-A2	8				
		A-DIN 9210 M8x100-A2		100	42	48	✓
		A-DIN 9210 M10x100-A2	10		30	57	✓
AISI316		A4-DIN 9210 M6x100	6	100			✓
		A4-DIN 9210 M8x60	8	60	20	37	-
		A4-DIN 9210 M8x100		100	42	48	✓

Quality	Finish	art.	L
AISI304	raw	A-DIN 7505A 5x20	20
		A-DIN 7505A 5x35	35

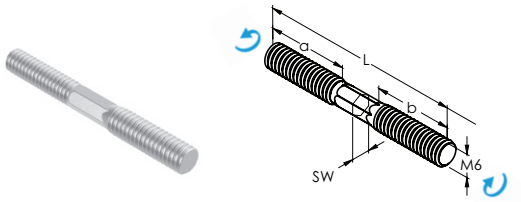

Quality	Finish	art.	M	L	a	b	SW
AISI316	raw	A4-DUAL M6/M6	6	65	30	30	✓
		A4-DUAL M10/M10	10				

new

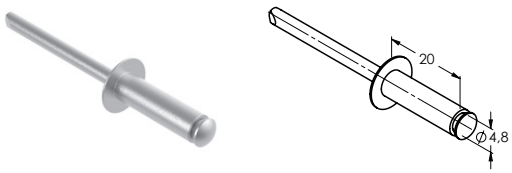

Quality	Finish	art.
AISI304	raw	A-DIN 7337-A2 4,8x20

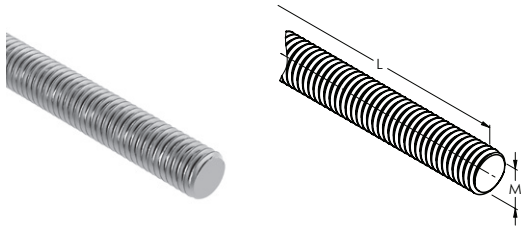

Quality	Finish	art.	M	L	ETA opt.1
steel 8.8	Zn	Q5/08-VM250-M10-...	10	1000	✓
		Q5/08-VM250-M12-...	12		
AISI304	raw	A-DIN 975 M6	6		-
		A-DIN 975 M8	8		
		A-DIN 975 M10	10		
		A-DIN 975 M12	12		
		A-DIN 975 M16	16		
AISI316		A4-DIN 975 M10	10		
		A5/08-VM250-M10-...-A4			✓
		A5/08-VM250-M12-...-A4	12		
AISI304		A-DIN 975 M8-100	8	100	-
		A-DIN 975 M8-120		120	
		A-DIN 975 M8-150		150	
		A-DIN 975 M8-200		200	
		A-DIN 975 M10-100	10	100	
		A-DIN 975 M10-120		120	
		A-DIN 975 M10-150		150	
		A-DIN 975 M10-200		200	
		A-DIN 975 M12-100	12	100	
		A-DIN 975 M12-120		120	
		A-DIN 975 M12-150		150	
		A-DIN 975 M12-200		200	

new

new

new

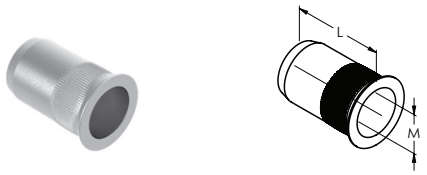

Quality	Finish	art.	M	L
AISI304	raw	A-FTT-M5	5	12
		A-FTT-M6	6	14
		A-FTT-M8	8	16,5
		A-FTT-M10	10	19

Quality	Finish	art.	M
steel	Zn	WOOD/M8-D	8
		WOOD/M10-D	10

ACCESORIES

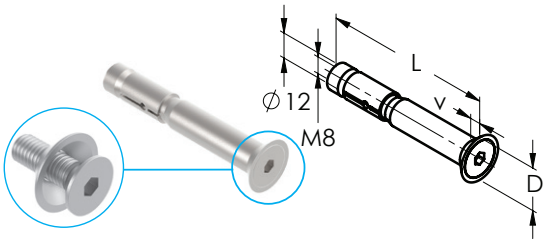

Quality	Finish	art.	L	D/v
steel	Zn	Q5/08-HAZ-M8-80SK/S	80	20,5/5
		Q5/08-FH12-50	125	22/5,8
		Q5/08-12-125		
AISI316	raw	A5/08-HAZ-M8-80SK/A4	80	20,5/5
		A5/08-12-125	125	22/5,8

top
new
new

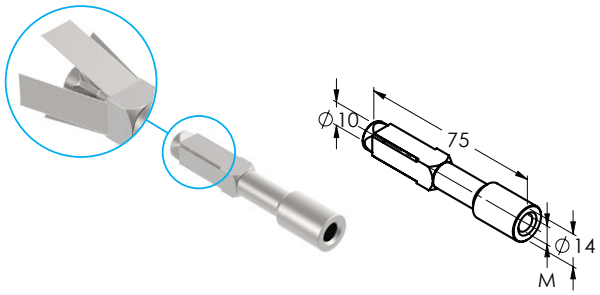

Quality	Finish	art.	M
steel	raw	Q11/FPX-M8	8
		Q11/FPX-M10	10

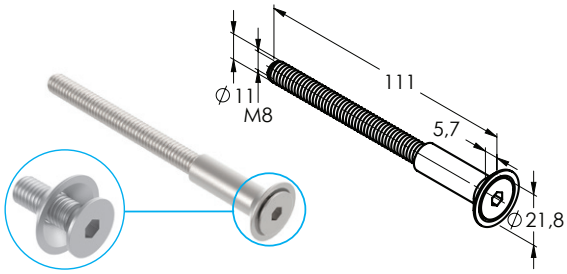

Quality	Finish	art.
AISI304	raw	A5/08-105x11xM8
AISI316		A14/08-105x11xM8

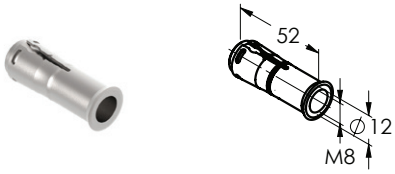

Quality	Finish	art.
steel	Zn	Q5/08-TNTR08-8x52

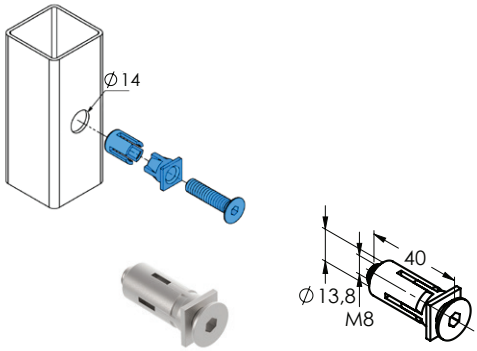

Quality	Finish	art.
steel	Zn	Q5/09-Quick-Fix QF5

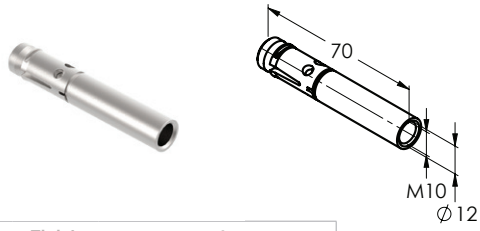

Quality	Finish	art.
steel	Zn	Q5/08-FAZ-IG-M10-70/S
AISI316	raw	A5/08-FAZ-IG-M10-70/A4

A19/04-PVC A19/04-PVC-L A19/04-PVC-BLACK

Quality	Finish	art.
PVC	raw	A19/04-PVC
	polish	A19/04-PVC-L
	black	A19/04-PVC-BLACK

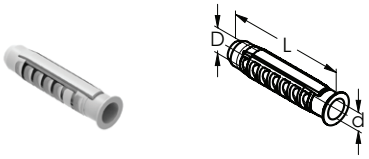

Quality	Finish	art.	D	d	L
NYLON	gray	Q5/07-8 NYLON	8	2,5-4	40
		Q5/07-10 NYLON	10	3-6	50
		Q5/07-12 NYLON	12	4-8	60

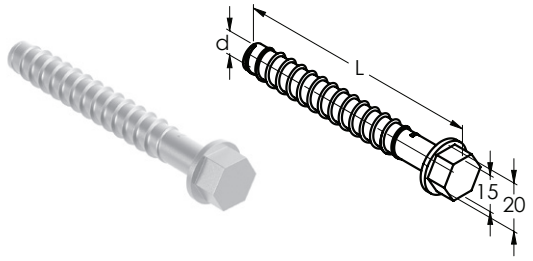

Quality	Finish	art.	d	L
steel 5.8	Zn	Q5/08-BS-S-10-90/S	10	90
AISI316	raw	A5/08-BS-S-10-90/A4		
steel 5.8	Zn	Q5/08-BS-S-12-110/S	12	110
AISI316	raw	A5/08-BS-S-12-110/A4		

new

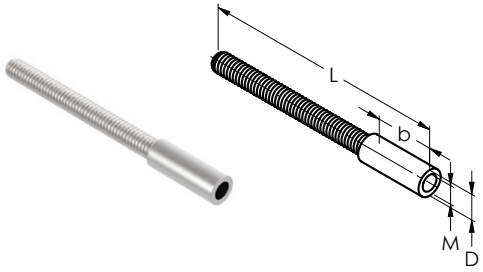

Quality	Finish	art.	M	L	D	b
AISI304	raw	A19/27-M8	8	140	11	15
		A19/27-M10	10		13	
		A19/27-M12	12	130	15	25

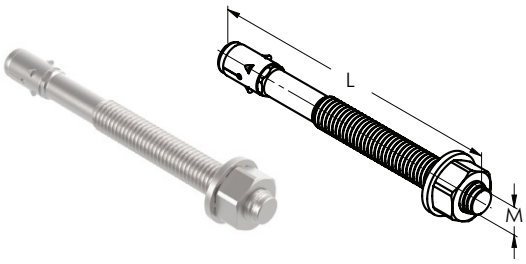

Quality	Finish	art.	M	L
steel	Zn	Q5/06-8x100CE	8	92
		Q5/06-10x120CE	10	120
	raw	Q5/08-FBN12-30	12	126
	Zn	Q5/06-16x123CE	16	123
		Q5/06-16x138CE	16	138
AISI304	raw	A-Q5/06-10x120CE	10	120

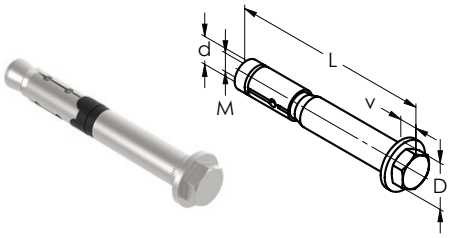

Quality	Finish	art.	M	L	d	D/v
steel	Zn	Q5/08-HAZ-M8-85S/S	8	85	12	20/7,5
	raw	Q5/08-FH15/25 S	10	89	15	25/9,5
	Zn	Q5/08-HAZ-M10-106S/S		106		
AISI316	raw	A5/08-HAZ-M8-85S/A4	8	85	12	20/7,5
		A5/08-HAZ-M10-106S/A4	10	106	15	25/9,5

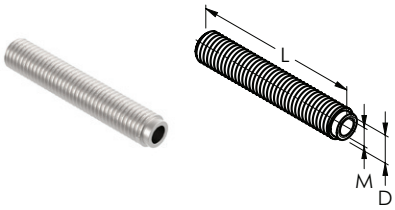

Quality	Finish	art.	M	L	D
steel 5.8	Zn	Q5/08-VI-IG-M8-100/S	8	100	12
		Q5/08-VI-IG-M10-80/S	10	80	16
		Q5/08-VI-IG-M12-125/S	12	125	20
AISI316	raw	A5/08-VI-IG-M8-100/A4	8	100	12
		A5/08-VI-IG-M10-80/A4	10	80	16
		A5/08-VI-IG-M12-125/A4	12	125	20

A12/12-PVC

A12/12-35-PVC

Quality	Finish	art.
PVC	raw	A12/12-PVC
		A12/12-35-PVC

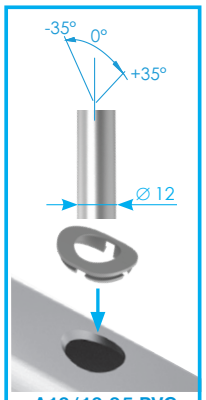

A12/12-35-PVC

art.	ml	quality	description
Q5/01GF-300 Nordic		vinylester	-20°C +10°C
Q5/01GF-400 Nordic			
Q5/01GF-300			-10°C +30°C
Q5/01GF-400			

top

art.	ml	quality	description
Q5/01B-300		vinylester	-10°C +40°C
Q5/01B-400			-10°C +40°C
Q5/01B-400 Winter			-20°C +20°C

new

art.	ml	quality	description
Q5/01GFP-300		Polyester	-5°C +30°C
Q5/01GFP-400			

art.	ml	quality	description
Q5/05TR-310		Silicone	-5°C +40°C

art.	ml	quality	description
Q5/01-WIT-UH300...	320	uretan vinylester	-5°C +40°C
Q5/01-WIT-VM250...	300	vinylester	-10°C +40°C

Q5/04-250

art.	M	L
Q5/04	17	215
Q5/04-250	8	250

new

art.	description
Q5/03-300	300ml, hobby

art.	description
Q5/03-400	400ml, profi

art.	description
Q5/01-16x130	mesh

art.	description
Q5/02	blow pump

art.	t	b	L
Q9/03-3x12	3	12	16,5

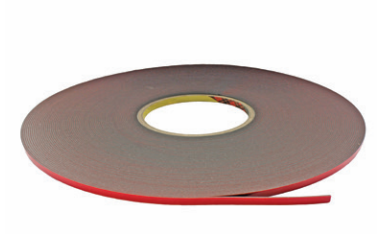

art.	t	b	L
Q9/03-0,2x9	0,2	9	50
Q9/03-0,5x9	0,5	9	33
Q9/03-2x6	2	6	16,5

new

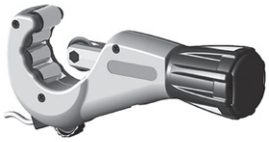

art.	∅	description
Q1/B02-INOX	3-45	Pipe cutting

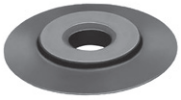

art.	compatibility
Q1/B02-INOX-RK	Q1/B02-INOX

Quality	Finish	art.
AISI304	raw	A19/model741-8

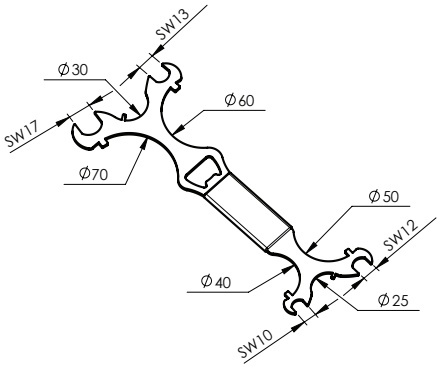

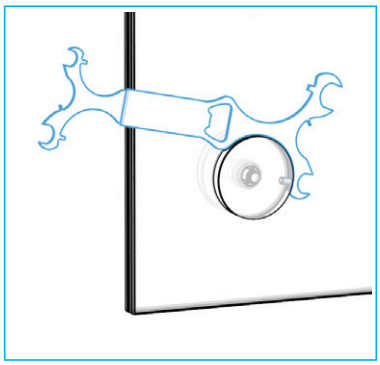

Q/INOX-INSTALL-SET

Q/INOX-INSTALL-SET-B

new

art.								
Q/INOX-INSTALL-SET	1x	-	-	1x	1x	1x	1x	1x
Q/INOX-INSTALL-SET-B	-	1x	1x	2x	2x			2x

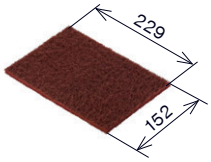

art.	granularity
Q1/G01	360

art.	description	
Q1/RN01-125x1	cutting disc	top
Q1/RN01-150x1,6		new
Q1/RN01-230x2		

art.	description	
Q1/L01-125-40	flap disc	new
Q1/L01-125-60		
Q1/L01-125-80		
Q1/L01-125-120		

new

art.	description	operation
Q8/LP-7x4,5	riveting punch	2 steps

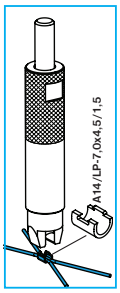

new

art.	description	operation
Q8/LP-7x4,5-B	riveting punch	1 step

Quality	art.	use	∅
HSS-TiN	A-DRILL-D4-20	metal	4-20

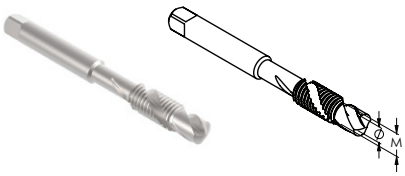

Quality	art.	M	∅
HSS-CO5	A-DRILL-M5	5	4
	A-DRILL-M6	6	4,8
	A-DRILL-M8	8	6,4

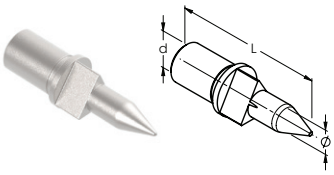

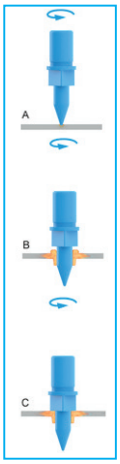

Quality	art.	M
HSSE	A/FDRILL-M5C	5
	A/FDRILL-M6C	6
	A/FDRILL-M8C	8
	A/FDRILL-M10C	10

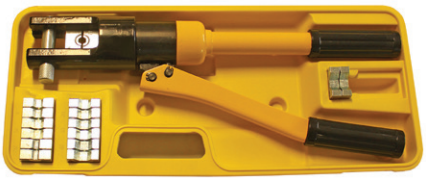

art.	Mould size	W	H
Q8/95	4	4	3
	6	5	3,5
	8	6	4,5
	10	6,5	5,4
	16	7,3	6,4
	25	9	7,4
	35	11	9,2
	50	13	10,8
	70	15	12,6

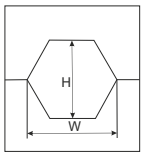

CA/ACTIVATOR CA/LAK

art.	g	description
CA/ACTIVATOR	1000	corten effect
CA/LAK		lacquer for corten

new

art.	ml	description
A/spray-WS	400	INOX

top

art.	ml	description
A/Cleaner-500ml	500	INOX

A/GLUE-577-50g A/GLUE-638-10g A/GLUE-638-50g

art.	g	gap	description
A/GLUE-577-50g	50	0,4	INOX, contains activator
A/GLUE-638-10g	10	0,15-0,25	
A/GLUE-638-50g	50		

new new new

art.	g	description
A/ACTIVATOR-500ml	500 ml	for A/Glue..

new

art.	description	ml
J08/08	cutting/drilling oil	400

art.	g	gap	description
A/GLUE-10g-C	10	0,2	INOX

A/GLUE-403-20g A/GLUE-20g

art.	g	gap	description
A/GLUE-20g	20	0,2	all purpose superfast
A/GLUE-403-20g			

art.	g	gap	description
A/GLUE-50g-C	50	0,2	INOX
A/GLUE-50g-D		0,4	INOX

new

art.	ml	description
Q5/05-MAMUT	290	instant fix

new

art.	ml
GS/Cleaner-Glass	200

new

art.	ml
GS/Cleaner-Metal	200

Art.
kat-Forged-2024/25

Art.
kat-Gates-2024/25

Art.
kat-Automations-2023/24

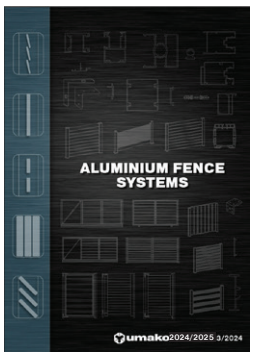

Art.
KAT-ALU-SYSTEMS-2024/25

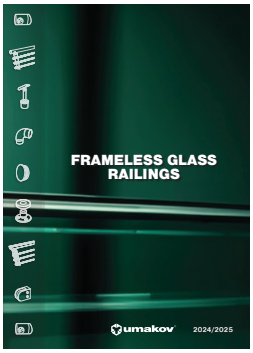

Art.
KAT-GLASS RAILINGS-2024/25

Art.
KAT-POST RAILINGS-2024/25

Art.
KAT-GLASS SYSTEMS-2024/25

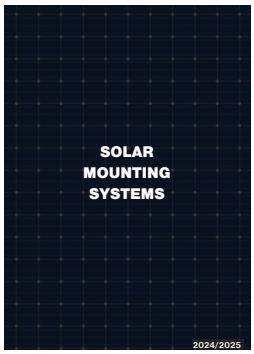

Art.
KAT-SOLAR-SYSTEMS-2024/25

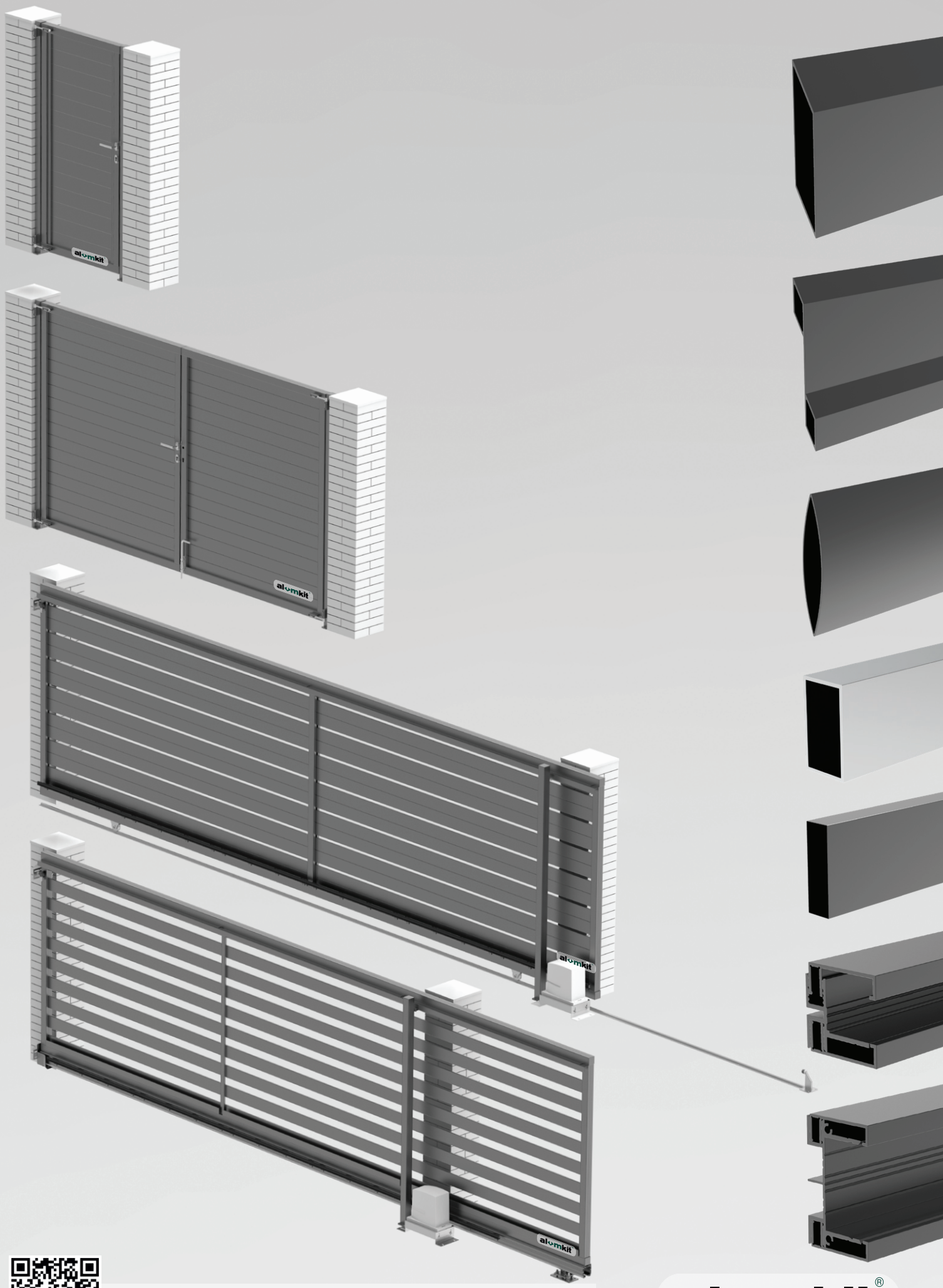

ALUMINUM fence systems

alumkit®

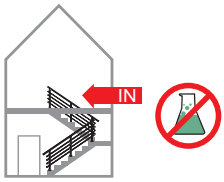

INOX			ALUMINIUM	ZAMAK
AISI304	AISI316	S.S. 2205		
✓	✓	✓	✓	✓

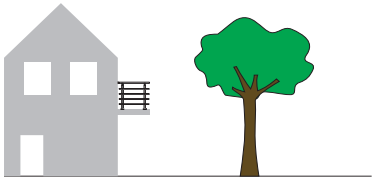

INOX			ALUMINIUM	ZAMAK
AISI304	AISI316	S.S. 2205		
✓	✓	✓	✓	✗

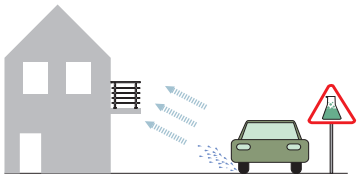

INOX			ALUMINIUM	ZAMAK
AISI304	AISI316	S.S. 2205		
✗	✓	✓	✓	✗

INOX			ALUMINIUM	ZAMAK
AISI304	AISI316	S.S. 2205		
✗	✓	✓	✓	✗

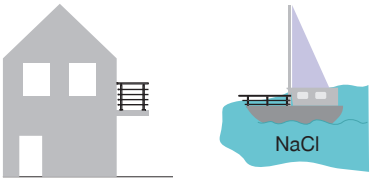

INOX			ALUMINIUM	ZAMAK
AISI304	AISI316*	S.S. 2205		
✗	✓	✓	✓	✗

** only mirror finish (polished)*

INOX			ALUMINIUM	ZAMAK
AISI304	AISI316	S.S. 2205		
✗	✗	✓	✗	✗

material	AISI304 AISI316 S.S. 2205	nerezová oceľ	stal nierdzewna	rozsdamentes acél	stainless steel	Edelstahl	INOX
	CORTEN	corten oceľ	corten stal	corten acél	corten steel	Cortenstahl	corten
	ALUMINIUM	hliník	aluminium	alumínium	aluminium	Aluminium	aluminium
	ZAMAK	zliatina Zn+Al	stop cynku i aluminium	Zn+Al ötvözet	ZAMAC	Zinkdruckguss	alliage Zn+Al
	Fe	železo	żelazo	vas	iron	Eisen	fer
	Zn	zinok	cynk	cink	zinc	Zink	zinc
	Brass	mosadz	miedź	sárgaréz	brass	Messing	laiton
	PVC	polyvinyl chloride					
	PETG	polyethylene terephthalate glycol					
	Rubber	guma	guma	gumi	rubber	Gummi	gomme
	Beech	buk	buk	bükk	beech	Buche	hêtre
	Oak	dub	dąb	tölgy	oak	Eiche	chêne
	Spruce	smrek	świerk	lucfenyő	spruce	Fichte	épicéa
	VSG/ESG	sklo	szkło	üveg	glass	Glas	verre
finish/effect	satin	brus K320	szlif K320	szálcsiszolt K320	brushed K320	geschliffen K320	brossé K320
	silver	strieborný	srebro	ezüst	silver	Silber	argent
	polish	lesk	polerowany	tükör polírozott	polished	poliert	poli
	raw	surový	surowy	nyers	raw	roh	brossé
	natural	nebrúsený	neszlifovany	natúr	rough	ungeschliffen	non-brossé
	INOX	nerez	nierdzewny	rozsdamentes	inox	Edelstahl	inox
	ELOX	eloxovaný	anodowany	eloxált	elox	Eloxiert	anodisé
		potrebné úpravy	niezbędne przystosowanie	szükséges módosítás	necessary modification	Anpassung ist notwendig	modification nécessaire
	not assembled	nezmontované	niezłożone	nem összeszerelt	not assembled	unmontiert	non assemblé
	≈	približný rozmer	przybliżone wymiary	közelítő méretek	approximate dimension	die Abmessungen sind ungefähr	dimensions approximatives
	top	bestseller	bestseller	legjobban eladott	best seller	Bestseller	best-seller
	new	novinka	nowość	új	new	Neuheit	nouveau
		RAL color					
		PVD = (physical vapor deposition) coating PVD-L = polished surface finish					
		LED					

INOX AISI 304
- vhodný do prostredia bez chlóru a oxidu siričitého

INOX AISI 316
- vhodný do prostredia s vysokým obsahom chlóru, oxidu siričitého, vysokej vlhkosti, do prímorských regiónov

INOX S.S. 2205- vhodný do prostredia s vysokým obsahom chlóru, oxidu siričitého, vysokej vlhkosti s prítomnosťou soli na pobreží a na voľnom mori.

INOX AISI 304
- suitable for the environment without chlorine and sulphur dioxide load

INOX AISI 316
- suitable for the environment with a high content of chlorine, sulphur dioxide load, high humidity, coastal regions

INOX S.S. 2205
- Suitable for environments with a high content of chlorine, sulfur dioxide, high humidity with salt on the coast and on the high seas.

INOX AISI 304
- przeznaczone dla środowiska bez dwutlenku siarki oraz chloru

INOX AISI 316
- przeznaczone dla środowiska o wysokiej zawartości dwutlenku siarki oraz chloru, wysokiej wilgotność oraz w regionach nadmorskie

INOX S.S. 2205
- Nadaje się do środowisk o wysokiej zawartości chloru, dwutlenku siarki, o wysokiej wilgotności, o dużym zasoleniu, w strefach nadmorskich, lub w bezpośrednim kontakcie z wodą morską.

INOX AISI 304
- alkalmazható olyan környezetben, ahol nincs klór és kén-dioxid terhelés

INOX AISI 316
- alkalmazható olyan környezetben, ahol magas a klór-, vagy kén-dioxid terhelés, magas a páratartalom, tengerparti régiókban

INOX S.S. 2205
-„Alkalmazható magas klór-, kén-dioxid-, sós nedvességtartalmú környezetben, valamint tengerparton és a nyílt tengeren".

INOX AISI 304
- geeignet in Umgebung ohne Chlor und Schwefeldioxid

INOX AISI 316
- geeignet in Umgebung mit einem hohen Gehalt an Chlor, Schwefeldioxid oder in Umgebung mit hoher Luftfeuchtigkeit, in Küstenregionen

INOX S.S. 2205
- geeignet für Umgebungen mit hohem Gehalt an Chlor, Schwefeldioxid und hoher Luftfeuchtigkeit mit Salz an der Küste und auf hoher See

INOX AISI 304
- Convenable pour les environnements sans chlore et/ ou bioxyde de soufre

INOX AISI 316
- Convenable pour les environnements avec un contenu élevé de chlore et/ ou de bioxyde de soufre, une grande humidité, régions maritimes

INOX S.S. 2205
- Convenable au milieu avec un contenu élevé du dioxyde de soufre, ainsi qu'au milieu humide contentant du sel, tel que le bord de mer ou la mer ouverte.

TEST / CERTIFICATE

LGA tested · LSL · AbP · IKA ES · Static Studio · Faculty of Civil Engineering · Gamin corrosion test report · INFRAPROJEKT s.c. · TESTED BY RISE SWEDEN · umakov TESTING